GREEN MOUNTAIN ENGINEERING, INC.

1438 South Brownell Road
P.O. Box 159
Williston, VT 05495
(802) 862-5590

January 24, 2018

Town of Bristol Selectboard
c/o Ms. Valerie Capels, Town Administrator
Town of Bristol
P.O. Box 249
Bristol, VT 05443

Re: Preliminary Engineering Letter Report - DRAFT
Wastewater System Upgrade
GME Project No. 16-025

Dear Valerie and Selectboard Members;

Green Mountain Engineering, Inc. (GME) has updated this preliminary engineering report in anticipation of an upgrade to the existing wastewater treatment system with a project primarily financed by the State of Vermont Revolving Loan Fund and local funds combination.

PROJECT PLANNING AREA

Figure No. 1 shows the approximate original service area, more commonly referred to as the Bristol Core Area, and a schematic layout of the existing collection system. The Core Area was originally comprised of 23 business and apartment buildings along Main Street and one (1) business and one (1) apartment building along South Street. Slight expansion of the service area has occurred to the northeast to serve residential, office and light commercial uses.

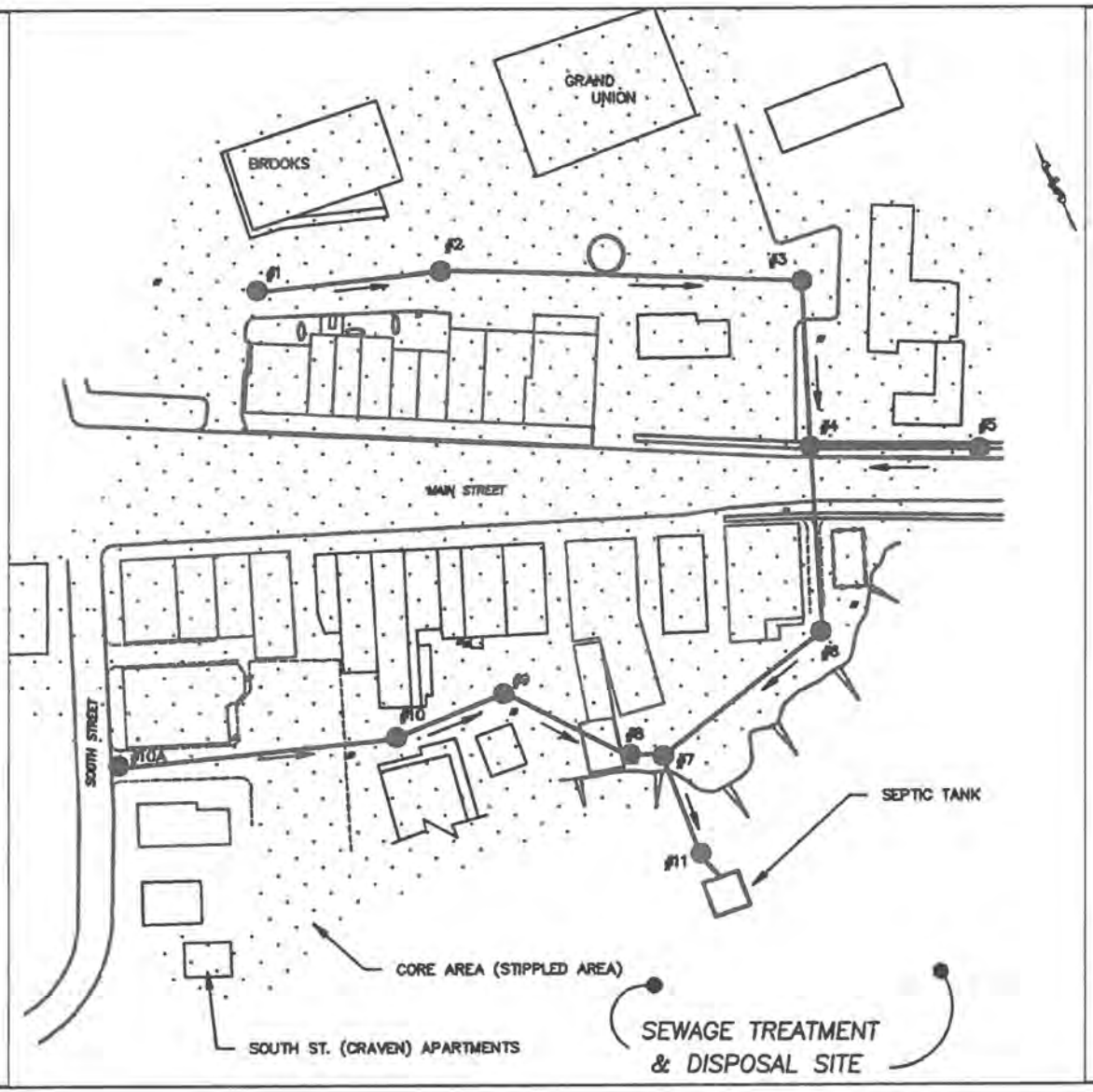

BRISTOL WASTEWATER STUDY

SEWER SYSTEM FLOW SCHEMATIC

GREEN MOUNTAIN ENGINEERING
CIVIL WATER WASTEWATER
1438 SOUTH BROWNELL ROAD
WILLISTON, VERMONT 05495
PHONE:(802)862-5590
FAX:(802)862-7598

SCALE:	DATE:	PROJECT NO.:	FIGURE #
NONE	JANUARY 22, 2018	16-025	1

EXISTING FACILITIES

The Bristol Wastewater Treatment Facility consists of collection sewers, a septic tank, and disposal fields located on the west side of Basin Street. The system is permitted to discharge treated domestic sewage from a subsurface disposal system serving numerous establishments located in Bristol, to the groundwater and indirectly into the New Haven River. The facility has a design capacity of 20,000 gallons per day (gpd). The average daily flow during the period from April 2016 to March 2017 was 8,696 gpd. The collection system consists of primarily 8-inch diameter PVC and some ductile iron piping shown schematically in Figure No. 1.

Originally, the commercial spaces located on both sides of Main Street all had individual wastewater disposal systems typically consisting of a buried septic tank and leach field or dry wells. The Bristol Wastewater Treatment Facility was constructed in 1993 as a replacement system for the individual systems, many of which experienced recurring failures that were serving the business and apartment buildings in the Core Area. The system was constructed and provided no capacity for growth within the service area. After several years of operation, actual flows were documented well below design flows and an Indirect Discharge Permit (No. ID-9-0208) was applied for and issued in 1998 with an approved discharge flow of 20,000 gpd.

In accordance with the discharge permit, issued by the State of Vermont, Wastewater Management Division, the Town of Bristol is required to have a Vermont registered Professional Engineer complete an annual inspection of the sewage collections, treatment and disposal system. Currently, Green Mountain Engineering is contracted to complete the system evaluation during the spring of each year to ensure that a copy of the annual inspection report is submitted to the State by June 1st. The annual inspection report displays a list of items inspected; the conditions encountered, and any recommended repairs or changes in operation that are required.

According to the Bristol Core Area Sewer System Budget & Annual Report, the annual operating budget for the sewer system is approximately $40,920, which includes approximately $11,874 in debt retirement. Users of the wastewater system presently pay a minimum charge of $125.00 per quarter for up to 100 gallons of Average Daily Flow (ADF) and a usage charge of $50.00 per quarter for every 100 gallons of ADF above the minimum 100 gallons.

NEED FOR PROJECT

By May 15th of every year, the Town of Bristol is required to submit a letter to the Secretary listing any facilities which were approved for connection to the sewage collection, treatment and disposal system during the previous twelve (12) months and the approximate date of connection. The Secretary reviews the long term data for concentrations of BOD5 and TSS in the septic tank effluent and the long term average daily flow. The reserve capacity is calculated based on the pounds of BOD5 and TSS discharged to the leach fields and the actual leach field loading capacity (based on a ADF = 20,000 gpd). The uncommitted reserve capacity, equal to 80% of the reserve capacity for any given year (after subtracting those approved connections to the system or those which have been connected for less than six (6) months), is then reported to the Town of Bristol. In May of 2017, the Wastewater Management Division reported that the uncommitted reserve capacity available for new connections was 1,417 gpd.

The available uncommitted reserve capacity varies based on average daily wastewater flow for the previous two years and the long-term wastewater strength for the system since its inception, represented by Biochemical Oxygen Demand (BOD) and Total Suspended Solids (TSS).

This reserve capacity is low enough to limit growth or possible changes of use within the core area (i.e. inadequate to allow for a 50-seat restaurant or six two-bedroom apartments). It is for this reason, that an upgrade to the existing sewage treatment system is needed. Also, during the annual system evaluations performed by GME, several deficiencies were noted which pose safety concerns for the system Operator. The hatches for each structure are in poor condition and in need of refurbishment or replacement. Lift gates inside the septic tank are seized and difficult to operate. Also, the dosing siphon counters have been problematic throughout the life of the system primarily due to vandalism and humidity. The counters are no longer used or maintained.

EVALUATION OF ALTERNATIVES

Based on limited research of available technologies, four wastewater treatment system alternatives were investigated to upgrade the existing facility to allow for additional reserve capacity. Each of the technologies chosen is appropriate for the flow range of the Bristol system and were chosen based on their relative cost and space limitations of the existing disposal system site.

1. Bioclere®, by Aquapoint

   The Bioclere® treatment system is manufactured by Aquapoint, headquartered in New Bedford, Massachusetts. The system is designed to provide enhanced treatment in a smaller footprint compared to conventional residential and commercial septic systems and leach field. The pre-engineered packaged systems have a modular design allowing for the installation of several systems in parallel to meet flow requirements.

   The typical Bioclere® system consists of the following components: 1) septic tank, 2) Bioclere, and 3) effluent disposal. Tertiary treatment such as filtration and UV disinfection also can be added between the Bioclere and effluent disposal. The Bioclere® unit is located mostly below grade with only a couple feet of the top of the tank exposed at grade. The unit is a circular fiberglass tank with a cone-shaped bottom consisting of two main sections, a biofilter and clarifier. The biofilter consists of PVC plastic media that provides a surface for microorganism to attach and grow. The clarifier is located below the biofilter and contains submersible pumps for media dosing, recirculation to the septic tanks, and effluent disposal.

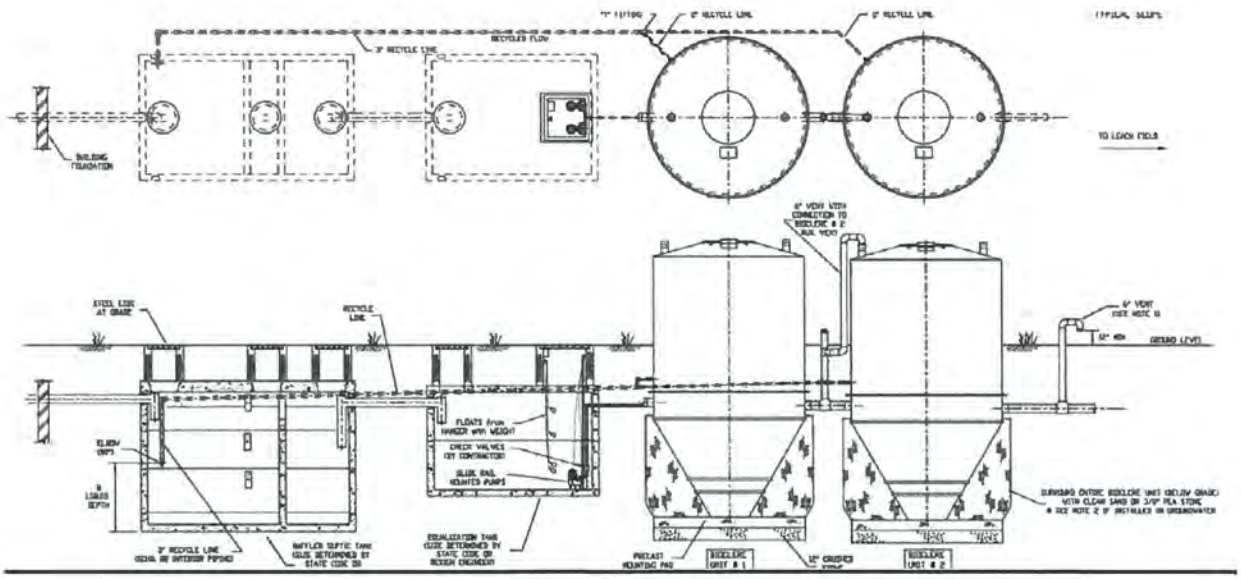

Bioclere provided three different treatment options including:

- Option 1: Dual stage Bioclere units in series.
- Option 2: AquaCELL aerobic moving bed biofilm reactor and single stage Bioclere unit.
- Option 3: AquaCELL aerobic moving bed biofilm reactor and single stage Bioclere unit.

For all alternatives, they recommend an 8,000 gallon flow equalization tank ahead of the treatment components.

We chose to evaluate Option 1 as all of the options are very similar in price. Option 1 is more simplistic and provides for redundancy. There is also less maintenance.

2. SeptiTech®

SeptiTech®, Inc. is headquartered in Gray, Maine and manufactures a packaged trickling filter system. This product is represented and supported locally by S.D. Ireland. The treatment system is designed to provide enhanced treatment in a smaller footprint compared to conventional residential and commercial septic systems and leach fields.

The pre-engineered packaged systems for commercial and residential uses are available in standard sizes up to 3,000 gpd. Custom systems in larger sizes up to 100,000 gpd are also available.

The SeptiTech® system consists of the following components: 1) 2-chambered baffled septic tank, 2) SeptiTech® Processor, and 3) effluent disposal fields/disinfection system (if used). The SeptiTech® Processor is a below-ground concrete tank containing the trickling filter. The media consists of hydrophobic polystyrene beads.

The SeptiTech® system model is a STAAR 18. This system is comprised of (2) STAAR 4.5 systems that basically work as two separate systems. There would be a total of (4) 8000 gallon treatment tanks. The outside dimensions of each tank would be 9'wide x 17'long x 11'-4" tall, and will have approximately 1' of riser above the top of the tanks for cover material. Each tank will also have (3) 30"x48" Aluminum hatches that will be mounted to the top each of the risers. The tanks will be two piece tanks and each half will weigh approximately 35,000lbs and will need to be set by an outside crane service provided by the contractor. The first tank in each system with be a single compartment and have three pump back pumps, recirculation pump and will basically be full of roughing media. The two second tanks will be three compartment tanks and will have three pump back pumps, recirculation pump, discharge pump and will have roughing and polishing media. The flows from the septic tank with need to be equally split to go to the two systems this means the existing septic tank may need to have an additional outlet hole drilled in it or some other way to split the outlet flow.

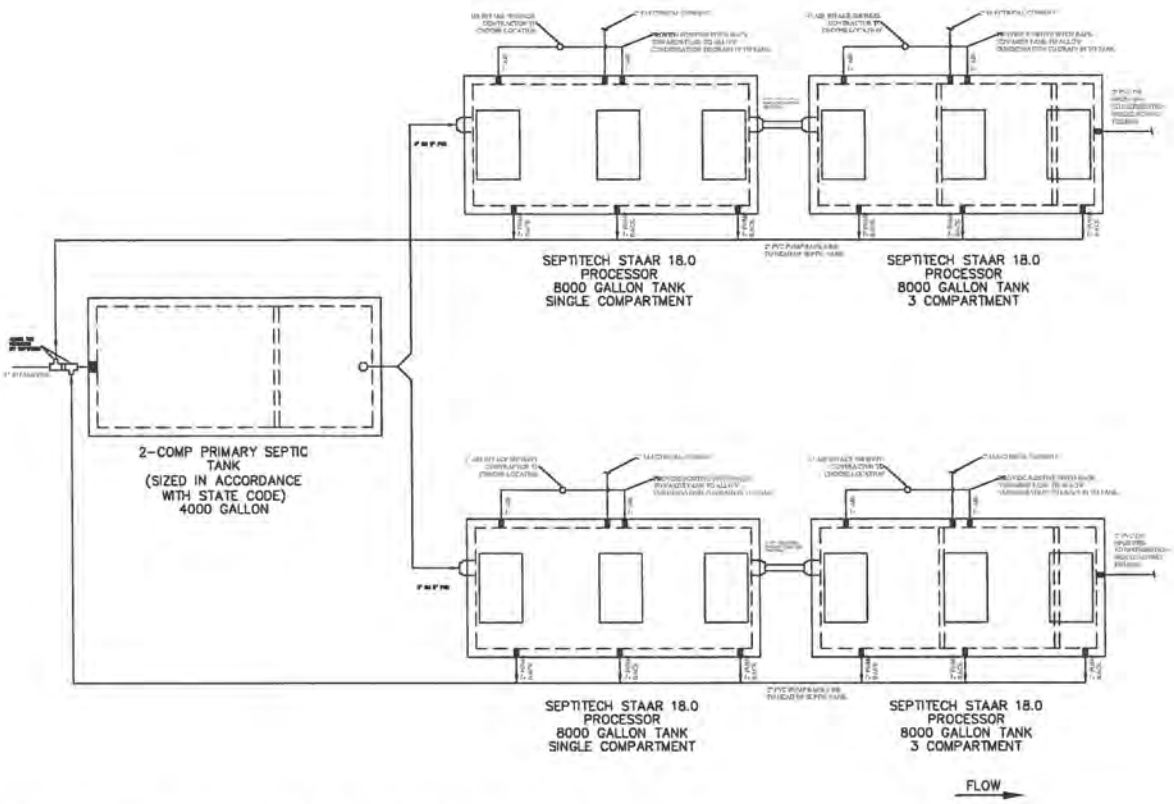

3. High-Strength FAST®, by Bio-Microbics

The FAST®, or Fixed Activated Sludge Treatment, wastewater treatment system is a pre-engineered modular wastewater treatment system/device designed to treat wastewater from residential, commercial, high strength, and small community applications. The system is a fixed film, aerated system utilizing a combination of attached and suspended growth. High-Strength FAST® is utilized in commercial applications or anywhere the strength of the waste introduces special challenges. The system is currently available with hydraulic capacities up to 9,000 gpd, but may be used in parallel and/or in series to meet larger flow or waste strength needs.

The FAST® system consists of the following components: 1) 2-chambered septic tank for primary settling and duplex pump vault, 2) tank with FAST® treatment insert, and 3) effluent disposal fields. The system is located below ground level and the only moving part, the quiet-running aerating blower, is placed above ground in an unobtrusive blower housing. The housing can be located up to 100 feet away.

No other filters or pumps are needed for the FAST® system. Below is a figure displaying the High-Strength FAST® treatment system.

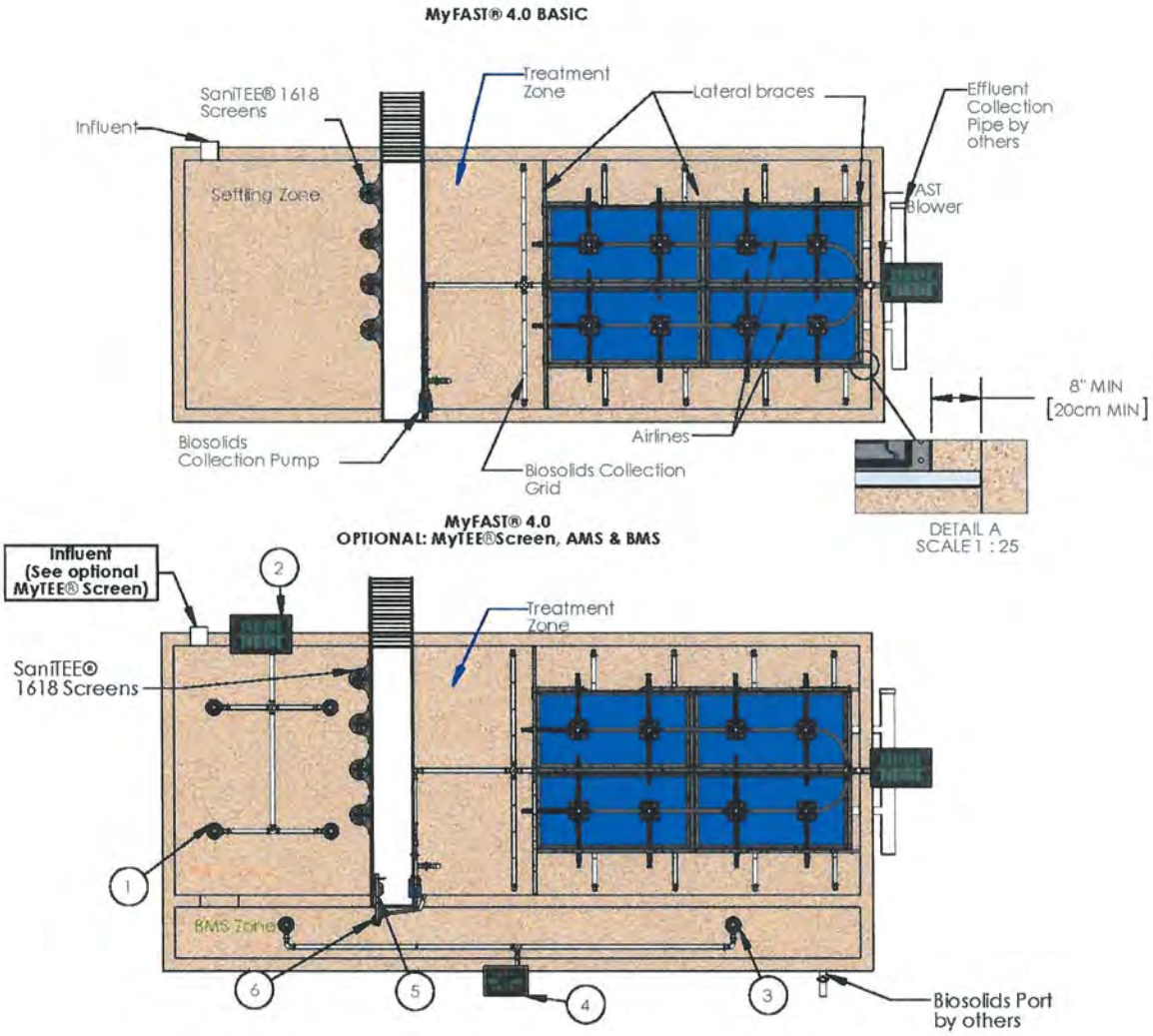

4. Orenco® Systems, Inc.

Orenco® Systems, Inc. is headquartered in Southerin, Oregon and manufactures a packaged trickling filter system. This product is represented and supported by Water Industries of Alton, New Hampshire. The treatment system is designed to provide enhanced treatment in a smaller footprint compared to conventional residential and commercial septic systems and leach fields.

Orenco's AdvanTex® AX-Max Treatment Systems are a dependable, proven technology for treating domestic-strength, primary-treated effluent to better-than-secondary standards, including nitrogen-reduction. They consist of sturdy, watertight fiberglass tanks that incorporate recirculation-blend and discharge tankage in a single module. Each complete, pre-manufactured unit also includes pumping systems, ventilation, and a lightweight, highly absorbent, engineered textile media that treats wastewater in a small space.

AX-Max Treatment Systems are intended for large residential applications or for commercial and municipal applications that require advanced secondary treatment. They eliminate the need for separate recirculation and discharge tanks by performing both functions within a single module. AX-Max units are marketed for subdivisions, "fringe" development, hotels, resorts, schools, churches, businesses, manufactured home parks, RV parks, campgrounds, rest areas, and truck stops.

Depending on model, a single AdvanTex® AX-Max unit can treat peak flows of 5,000-15,000 gpd (18.9-56.8 m3/day). AdvanTex® Treatment Systems are modular, however, and can be installed in multi-unit arrays to handle higher flows. Eight (8) treatment units are anticipated for the Bristol system.

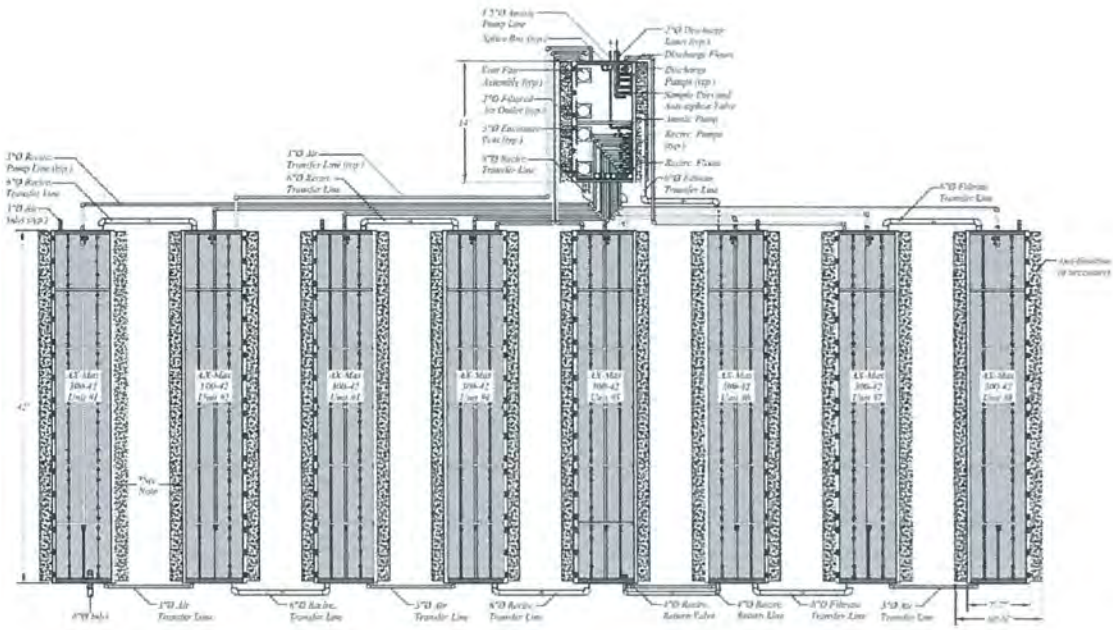

5. Cromaglass®

Cromaglass® was the system recommended in the previous report, dated August 13, 2007. Cromaglass® has since gone out of business. Therefore, Cromaglass® is not an alternative anymore.

The following influent conditions and effluent requirements were used during the comparison of the technologies described above.

Table 1
Design Criteria

1.	Influent Conditions	
	a. Average Design Flow	20,000 gpd
	b. BOD	400 mg/l
	c. Total Suspended Solids	85 mg/l
2.	Effluent Criteria	
	a. BOD (5 days – 10 C)	30 mg/l
	b. Total Suspended Solids	30 mg/l

One of the most important considerations for this project is the constraints presented by the existing site. Access is limited to Basin Street and due to its steep grade and sharp change in grade from Main Street, delivery of large heavy tanks is challenging.

Electric power for each alternative is readily available at the site. However, a new electric service is needed for each of the alternatives. The new electric service costs are included in the cost of the alternatives.

Septic tank modifications, which are included in each alternative will include replacement of slide gates and hatches.

The dosing siphons are in poor condition. The existing counters do not work. The dosing syphons should be replaced and new dosing counters should be added. The FLOUT® Dosing System offers a simple, self-contained and trouble-free method of delivering intermittent dosing to gravity fed and pressure fed septic fields.

A chamber of sufficient dimensions to contain the required dose has an upper inlet and a lower outlet, usually at floor level. No plumbing extends below the floor. The outlet diameter is usually 3 inches but may be 4 inches, 2 inches, or as small as 1 inch.

A box shaped vessel floats on the surface of the liquid in the chamber. There is an opening in the upper side of the vessel and a ballast weight is attached. A length of pipe extends far into the vessel, through the side, and attaches to a special flexible connector the same diameter as the pipe. The other end of the connector is connected to the outlet, usually via a tee fitting with a vent extending above the maximum liquid level.

The flexible connector acts as a hinge, allowing the vessel to float ever higher as the chamber fills. When the vessel can float no higher, liquid spills into the vessel, forcing it to sink to the floor, allowing the liquid to flow through the outlet. When the liquid level drops to the top of the vessel, flow stops when the vessel drains and re-floats in the remaining liquid.

Failed siphons are readily replaced with Flouts.

With the exception of the Orenco® System, each of the wastewater treatment technologies that were described above would fit within the confines of the existing treatment and disposal area on Basin Street. For this reason, the Orenco® System has been eliminated as a viable option.

Each of the remaining alternatives would require excavation and relocation/removal of existing components, but additional lands are not required. For each alternative, the existing splitter box would be removed. Each alternative will result in effluent pumps being used to deliver wastewater to the existing dosing tank. Dosing out of the fields would then be achieved by the flout units.

The Bioclere unit can be fed by gravity from the existing septic tank. Septitech®, and Fast® units require influent pump stations to distribute the wastewater uniformly. Only one of the four options (Fast) employs actual blowers for wastewater treatment. Bioclere® units have small horsepower fans. Adequate provisions would be required to reduce the noise levels of this alternative due to the residential nature of the surrounding area.

The Bioclere® units are represented by AquaPoint of New Bedford, Massachusetts. See Appendix C for the Bioclere® proposal and technical information. Septitech® units are presently represented locally by S.D. Ireland of South Burlington, Vermont. See Appendix D for the Septitech® Proposal and technical information. The Fast® units are represented by Camp Precast from Milton, Vermont. See Appendix E for the Fast® proposal. Technical information Orenco® are represented by Camp Precast of Milton, Vermont. See Appendix F for the Orenco® technical information.

Table 2
Mechanical Requirements

Technology	Influent Pumps (#)	Blowers(#)	Process Pumps (#)	Discharge Pumps (#)
Bioclere	No	Fan	Yes (6)	Yes (4)
Septitech	Yes (2)	No	Yes (12)	Yes (4)
Orenco	Yes	Fan	Yes (4)	Yes (2)
Fast	Yes (2)	Yes (2)	No	Yes (4)

PROJECT COSTS

This section presents Opinions of Probable Costs for construction, total project costs and operation and maintenance costs.

Opinions of Probable Construction costs for each* alternative described above are presented in Tables A-1 through A-4 in Appendix A.

A Total Project Cost Summary for each alternative* is presented in Table 3. Total project costs include construction costs, plus other project related costs such as technical services, legal and fiscal, administrative, construction and engineering contingency, land acquisition, and interest on short-term loans.

Representative first year operation and maintenance costs are presented in Table 4.

RECOMMENDED PROJECT

Green Mountain Engineering, Inc. recommends the Septitech® alternative for the Bristol Core Area Wastewater Treatment Upgrade, based on its relative construction cost, local representation and overall basic operation.

Table 5 presents a recommended schedule for implementation of the project.

TABLE 3

BRISTOL WASTEWATER STUDY

TOTAL PROJECT COST SUMMARY

DESIGN AND CONSTRUCTION COSTS

System Alternative No.	Bioclere® No. 1	SeptiTech® No. 2	Fast® No. 3	Orenco® No. 4
CONSTRUCTION	$430,000	$450,000	$500,000	$1,655,000
ENGINEERING	105,000	110,000	120,000	150,000
LEGAL AND FISCAL	5,000	5,000	5,000	5,000
ADMINISTRATIVE	2,000	2,000	2,000	2,000
LAND ACQUISITION	0	0	0	0
INTEREST	5,000	5,000	6,000	10,000
CONTINGENCY	54,000	56,000	62,000	180,000
TOTAL	$601,000	$628,000	$695,000	**$2,002,000**

TABLE 4

BRISTOL WASTEWATER STUDY

ANNUAL OPERATION AND MAINTENANCE COST

ANNUAL OPERATION & MAINTENANCE COSTS	CURRENT OPERATIONAL EXPENSES	FIRST YEAR
OPERATING CONTRACT	$ 9,592	$ 12,000
ADMINISTRATIVE	$ 2,724	$ 2,724
FICA/MEDICAL	$ 208	$ 208
RETIREMENT	$ 204	$ 204
HEALTH INSURANCE	$ 997	$ 997
DISABILITY INSURANCE	$ 30	$ 30
SUPPLIES	$ 800	$ 800
INSURANCES	$ 202	$ 1,250
MAINTENANCE/PUMPING	$ 11,100	$ 15,000
ELECTRICITY	$ 0	$ 15,000
TELEPHONE/CELLULAR SERVICE	$ 0	$ 600
TESTING	$ 1,200	$ 2,000
ENGINEERING	$ 1,800	$ 2,000
DEBT RETIREMENT	$ 11,874	$ 48,631*
CAPITAL RESERVE	$ 169	$ 1,000
MISCELLANEOUS	$ 20	$ 1,000
TOTAL	**$ 40,920**	**$103,444**

***Includes existing debt retirement ($11,874 – expires November 2023), plus an estimated debt retirement ($36,757) for the recommended project based on financing at 2% for 20 years.**

TABLE 6

BRISTOL WASTEWATER STUDY

PROJECT SCHEDULE

The following schedule is a proposed chronological listing of the activities that should follow the review of this report by the Town of Bristol.

The Town may wish to consider the November 2023 maturity of the existing debt when considering the timing of moving the project forward through the process.

Please note that the first bond payment for a project of this type is typically due 2 years following substantial completion or 1 year following the end of the warranty period.

1.	Submit Final Study Report to ANR with Planning Loan Application	September 2018
2.	Complete Reviews (ANR, Other)	November 2018
3.	Begin Final Design	December 2018
4.	Public Meeting/ Vote	March 2019
5.	Complete Final Design and Submit with Construction Application for Review	March 2019
6.	Complete Reviews & Make Final Changes	May 2019
7.	Advertise for Bids	June 2019
8.	Begin Construction	August 2019
9.	Substantial Completion	June 2020

As you can see this schedule is fairly aggressive and is presented for discussion purposes only at this phase of the project.

Thank you for the opportunity to provide this wastewater study for the Core Area Sewer System. I look forward to discussing this report at your February 5, 2018 Selectboard meeting.

Sincerely.

GREEN MOUNTAIN ENGINEERING, INC.

Kevin J. Camara, P.E.
Project Engineer

APPENDIX A – OPINION OF PROBABLE CONSTRUCTION COST TABLES

TABLE A-1

OPINION OF PROBABLE CONSTRUCTION COST

ALTERNATIVE NO. 1 - Bioclere, by Aquapoint

Dual Stage Bioclere units in series.

Bristol, Vermont

Description	Quantity	Units	Unit Price	Total Cost
WASTEWATER TREATMENT UPGRADE				
Treatment System	1	L.S.	$162,000	$162,000
Treatment Sitework	1	L.S.	$50,000	$50,000
Equalization Tank	1	L.S.	$30,000	$30,000
Effluent Pump Station	1	L.S.	$30,000	$30,000
Controls	1	L.S.	$35,000	$35,000
Septic Tank Modifications	1	L.S.	$20,000	$20,000
Electrical	1	L.S.	$25,000	$25,000
Piping, Valves, Misc.	1	L.S.	$15,000	$15,000
Dosing Siphon Modifications	1	L.S.	$25,000	$25,000
			SUBTOTAL	$392,000
MISCELLANEOUS				
Site Prep./Misc. Work	1	L.S.	$31,360	$31,360
Contractor's Bond	1	L.S.	$6,350	$6,350
			SUBTOTAL	$37,710
			TOTAL	$429,710
			USE	**$430,000**

TABLE A-2

OPINION OF PROBABLE CONSTRUCTION COST

ALTERNATIVE NO. 2 - SeptiTech

Bristol, Vermont

Description	Quantity	Units	Unit Price	Total Cost
WASTEWATER TREATMENT UPGRADE				
Treatment System	1	L.S.	$204,000	$204,000
Treatment Sitework	1	L.S.	$40,000	$40,000
Effluent Pump Station	1	L.S.	$30,000	$30,000
Controls	1	L.S.	$35,000	$35,000
Septic Tank Modifications	1	L.S.	$20,000	$20,000
Electrical	1	L.S.	$25,000	$25,000
Piping, Valves, Misc.	1	L.S.	$15,000	$15,000
Dosing Siphon Modifications	1	L.S.	$25,000	$25,000
			SUBTOTAL	$394,000
MISCELLANEOUS				
Site Prep./Misc. Work	1	L.S.	$39,400	$39,400
Contractor's Bond	1	L.S.	$13,002	$13,002
			SUBTOTAL	$52,402
			TOTAL	$446,402
			USE	**$450,000**

TABLE A-3

OPINION OF PROBABLE CONSTRUCTION COST

OPTION NO. 3 - High-Strength FAST, by Bio-Microbics

Bristol, Vermont

Description	Quantity	Units	Unit Price	Total Cost
WASTEWATER TREATMENT UPGRADE				
Treatment System	1	L.S.	$135,000	$135,000
Concrete Tank	1	L.S.	$120,000	$120,000
Treatment Sitework	1	L.S.	$40,000	$40,000
Effluent Pump Station	1	L.S.	$30,000	$30,000
Controls	1	L.S.	$35,000	$35,000
Septic Tank Modifications	1	L.S.	$20,000	$20,000
Electrical	1	L.S.	$25,000	$25,000
Piping, Valves, Misc.	1	L.S.	$15,000	$15,000
Dosing Siphon Modifications	1	L.S.	$25,000	$25,000
			SUBTOTAL	$445,000
MISCELLANEOUS				
Site Prep./Misc. Work	1	L.S.	$44,500	$44,500
Contractor's Bond	1	L.S.	$7,343	$7,343
			SUBTOTAL	$51,843
			TOTAL	$496,843
			USE	**$500,000**

TABLE A-4

OPINION OF PROBABLE CONSTRUCTION COST

ALTERNATIVE NO. 4- Orenco

Bristol, Vermont

Description	Quantity	Units	Unit Price	Total Cost
WASTEWATER TREATMENT UPGRADE				
Treatment System	1	L.S.	$1,270,836	$1,270,836
Treatment Sitework	1	L.S.	$40,000	$40,000
Effluent Pump Station	1	L.S.	$30,000	$30,000
Controls	1	L.S.	$35,000	$35,000
Septic Tank Modifications	1	L.S.	$20,000	$20,000
Electrical	1	L.S.	$25,000	$25,000
Piping, Valves, Misc.	1	L.S.	$15,000	$15,000
Dosing Siphon Modifications	1	L.S.	$25,000	$25,000
			SUBTOTAL	$1,460,836
MISCELLANEOUS				
Site Prep./Misc. Work	1	L.S.	$146,084	$146,084
Contractor's Bond	1	L.S.	$48,208	$48,208
			SUBTOTAL	$194,291
			TOTAL	$1,655,127
			USE	**$1,655,000**

APPENDIX B – FIGURES

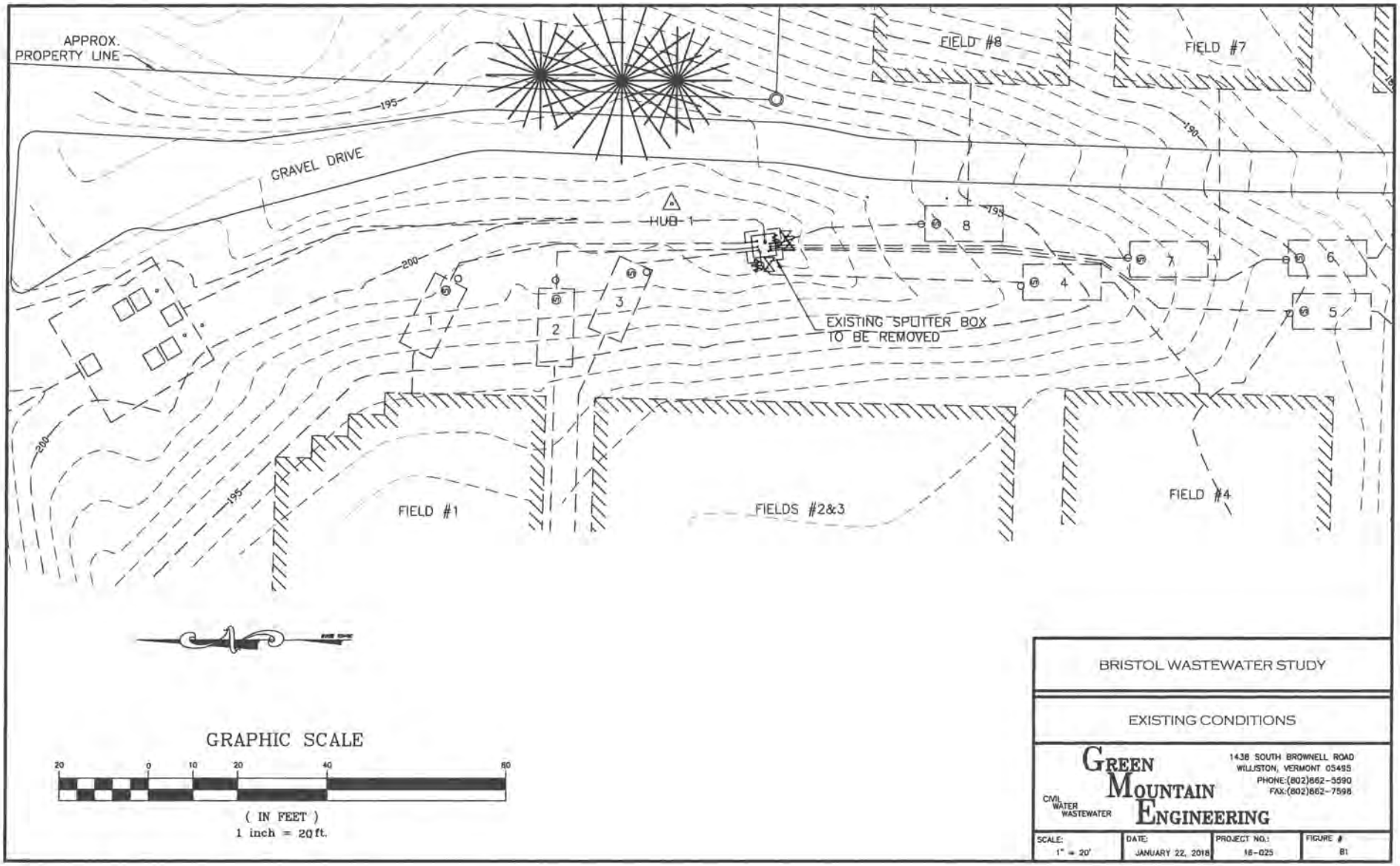

BRISTOL WASTEWATER STUDY

EXISTING CONDITIONS

GREEN MOUNTAIN ENGINEERING
CIVIL WATER WASTEWATER
1436 SOUTH BROWNELL ROAD
WILLISTON, VERMONT 05495
PHONE:(802)862-5590
FAX:(802)862-7598

SCALE:	DATE:	PROJECT NO.:	FIGURE #
1" = 20'	JANUARY 22, 2018	16-025	B1

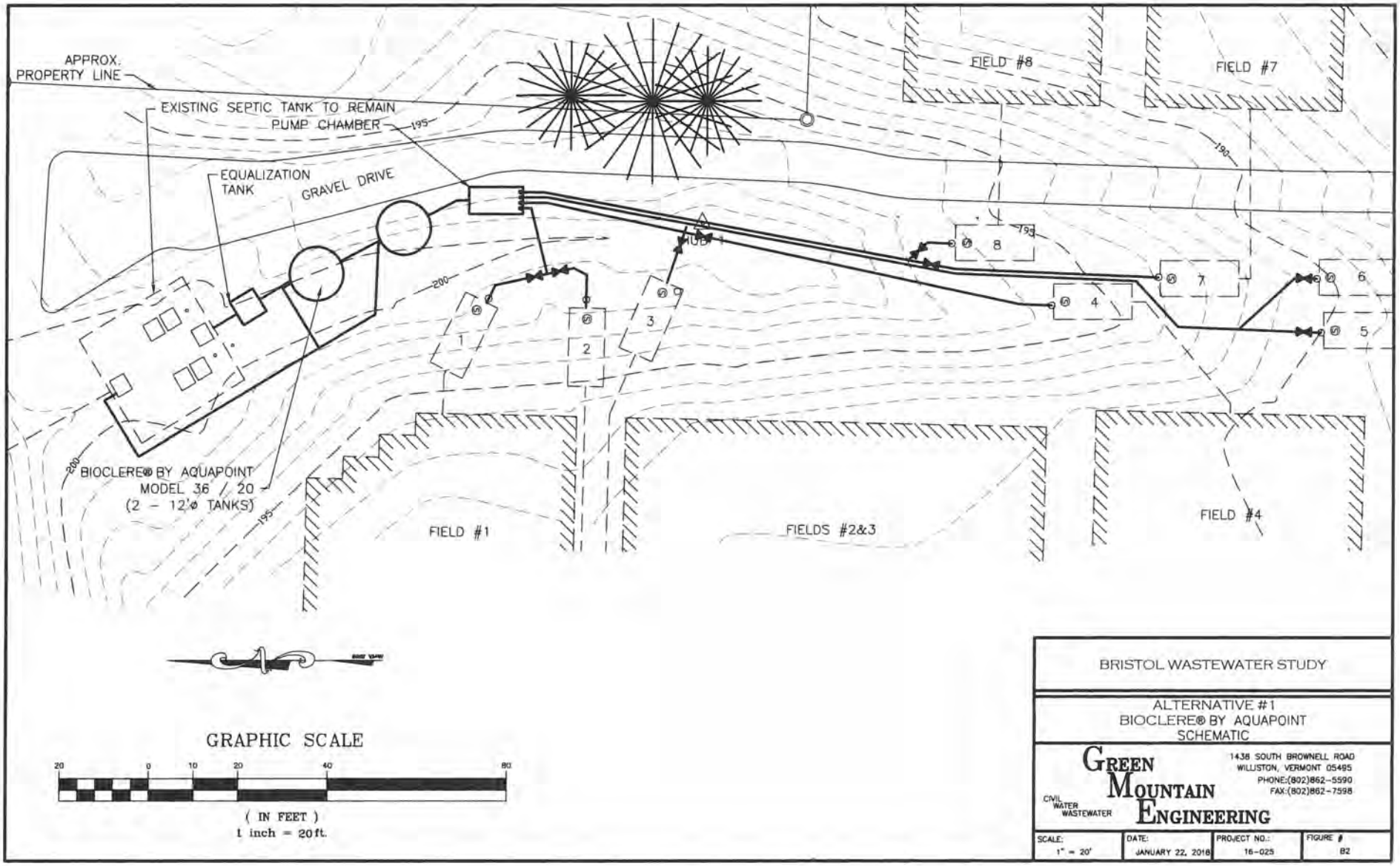
APPROX. PROPERTY LINE
EXISTING SEPTIC TANK TO REMAIN
PUMP CHAMBER
EQUALIZATION TANK
GRAVEL DRIVE
BIOCLERE® BY AQUAPOINT
MODEL 36 / 20
(2 - 12'ø TANKS)
FIELD #8
FIELD #7
FIELD #1
FIELDS #2&3
FIELD #4
HUB 1
1
2
3
4
5
6
7
8
195
190
200
GRAPHIC SCALE
20
0
10
20
40
80
(IN FEET)
1 inch = 20 ft.
BRISTOL WASTEWATER STUDY
ALTERNATIVE #1
BIOCLERE® BY AQUAPOINT
SCHEMATIC
GREEN MOUNTAIN ENGINEERING
CIVIL
WATER
WASTEWATER
1438 SOUTH BROWNELL ROAD
WILLISTON, VERMONT 05495
PHONE:(802)862-5590
FAX:(802)862-7598
SCALE: 1" = 20'
DATE: JANUARY 22, 2018
PROJECT NO.: 16-025
FIGURE # B2

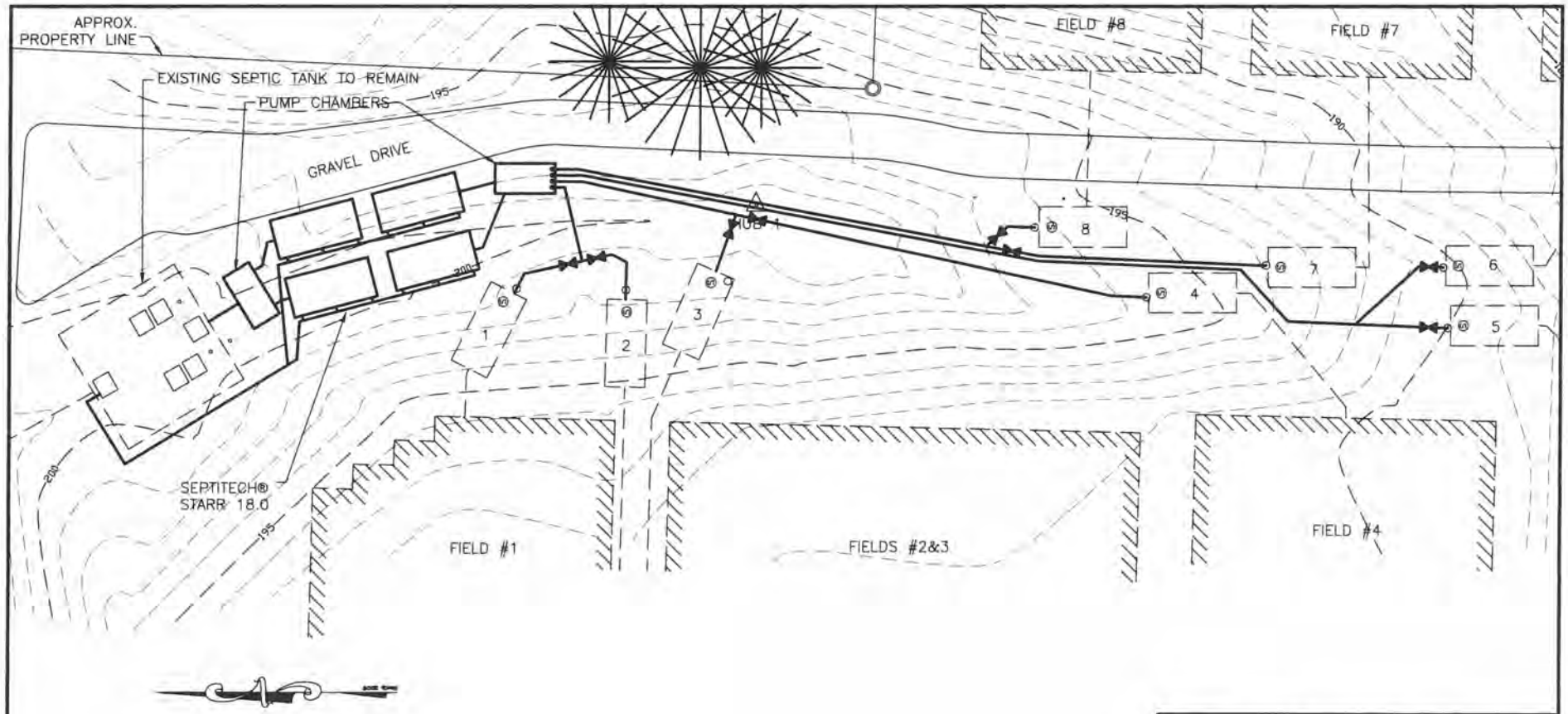

GRAPHIC SCALE

20 0 10 20 40 80

(IN FEET)
1 inch = 20 ft.

BRISTOL WASTEWATER STUDY

ALTERNATIVE #2
SEPTITECH SCHEMATIC

GREEN MOUNTAIN ENGINEERING
CIVIL WATER WASTEWATER
1438 SOUTH BROWNELL ROAD
WILLISTON, VERMONT 05495
PHONE:(802)862-5590
FAX:(802)862-7598

SCALE:	DATE:	PROJECT NO.:	FIGURE #
1" = 20'	JANUARY 22, 2018	16-025	B3

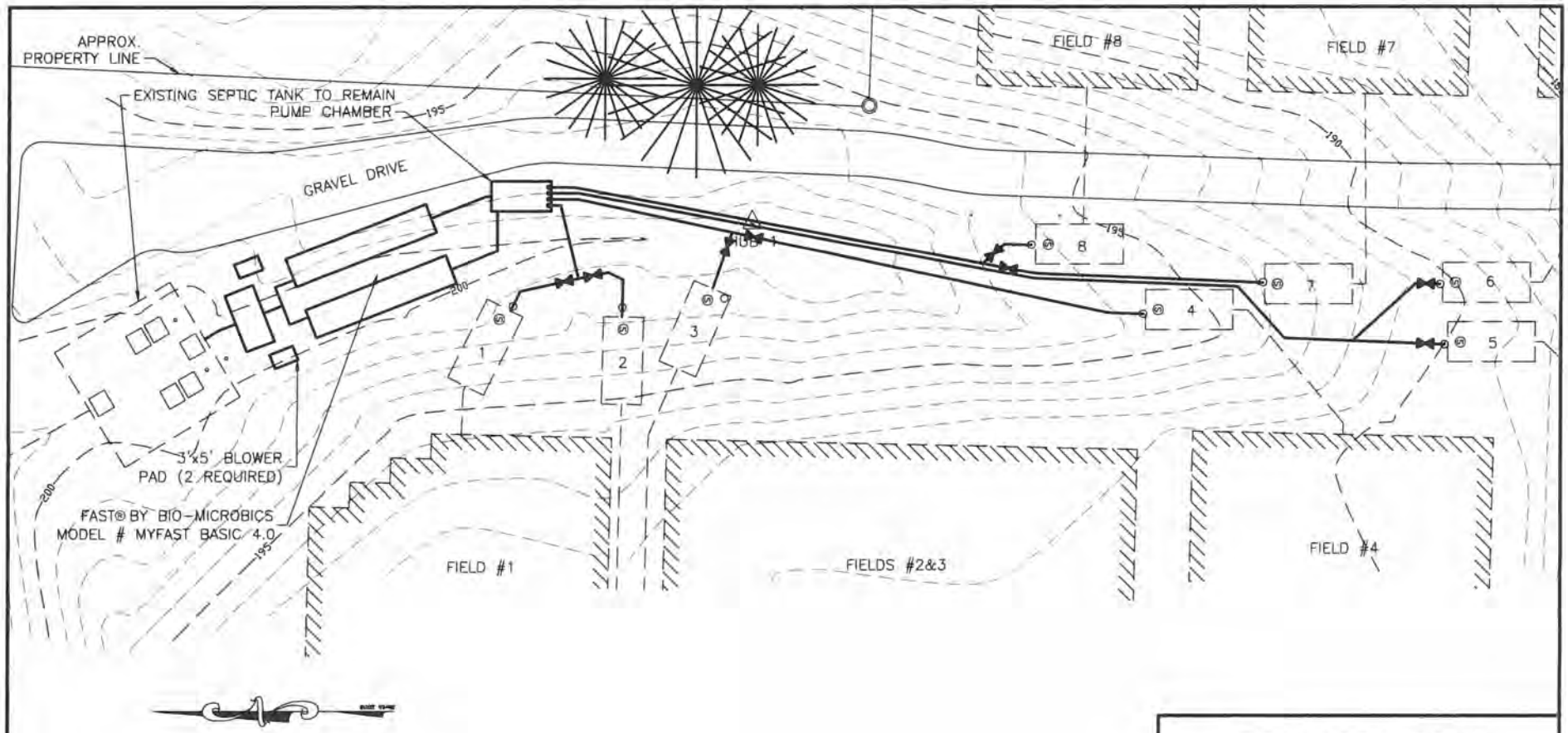

GRAPHIC SCALE

20 0 10 20 40 80

(IN FEET)
1 inch = 20 ft.

BRISTOL WASTEWATER STUDY

ALTERNATIVE #3
FAST® BY BIO-MICROBICS
SCHEMATIC

GREEN MOUNTAIN ENGINEERING
CIVIL WATER WASTEWATER
1438 SOUTH BROWNELL ROAD
WILLISTON, VERMONT 05495
PHONE:(802)862-5590
FAX:(802)862-7598

SCALE:	DATE:	PROJECT NO.:	FIGURE #
1" = 20'	JANUARY 22, 2018	16-025	84

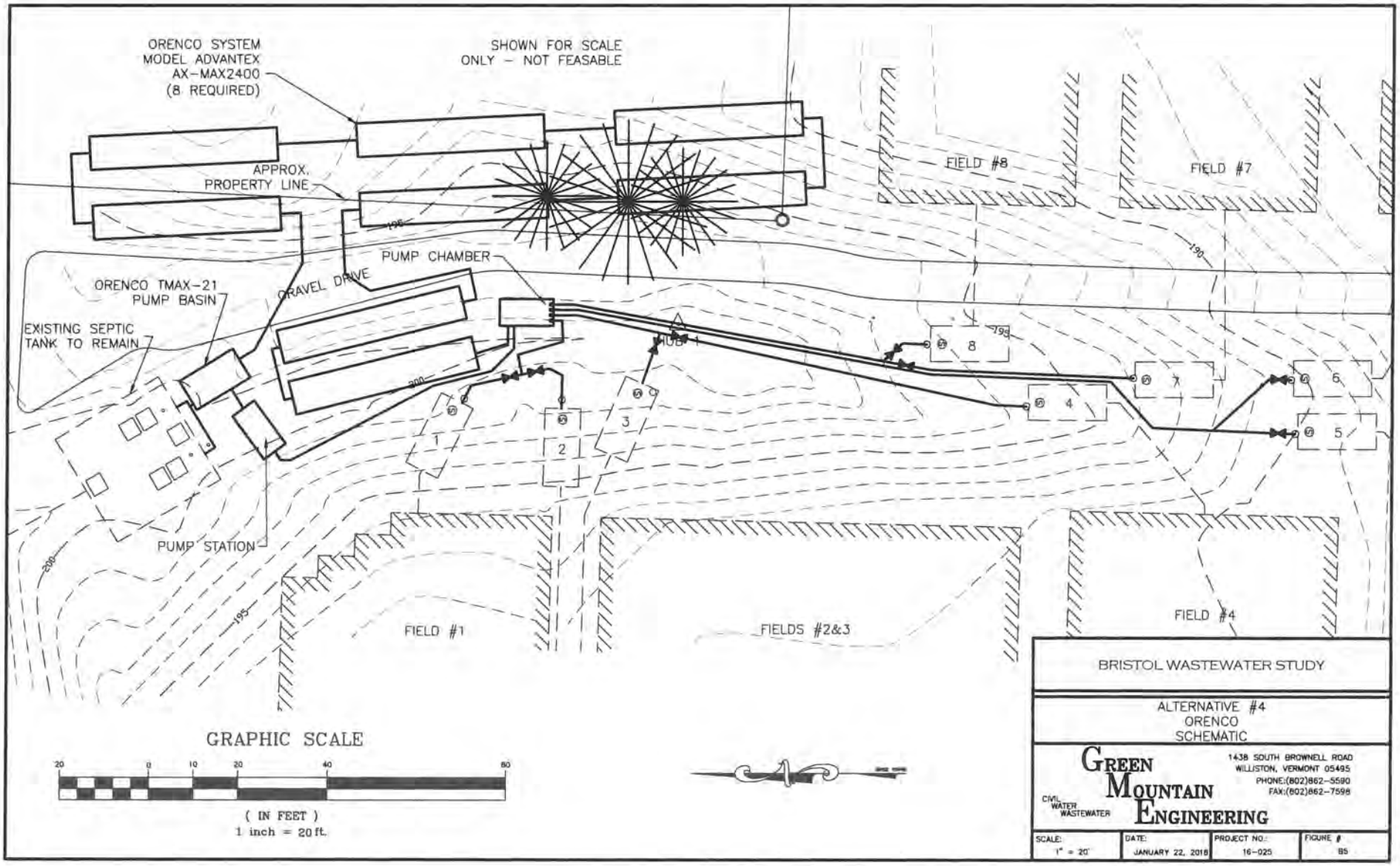
ORENCO SYSTEM
MODEL ADVANTEX
AX-MAX2400
(8 REQUIRED)
SHOWN FOR SCALE
ONLY - NOT FEASABLE
APPROX.
PROPERTY LINE
PUMP CHAMBER
ORENCO TMAX-21
PUMP BASIN
GRAVEL DRIVE
EXISTING SEPTIC
TANK TO REMAIN
PUMP STATION
FIELD #8
FIELD #7
FIELD #1
FIELDS #2&3
FIELD #4
HUB 1
1
2
3
4
5
6
7
8
195
190
200
GRAPHIC SCALE
20
0
10
20
40
80
(IN FEET)
1 inch = 20 ft.
BRISTOL WASTEWATER STUDY
ALTERNATIVE #4
ORENCO
SCHEMATIC
GREEN MOUNTAIN ENGINEERING
CIVIL
WATER
WASTEWATER
1438 SOUTH BROWNELL ROAD
WILLISTON, VERMONT 05495
PHONE:(802)862-5590
FAX:(802)862-7598
SCALE: 1" = 20'
DATE: JANUARY 22, 2018
PROJECT NO.: 16-025
FIGURE # 8S

APPENDIX C – BIOCLERE PROPOSAL

Kevin Camara

From: Mark Lubbers <MLubbers@aquapoint.com>
Sent: Tuesday, January 09, 2018 6:38 PM
To: Kevin Camara
Subject: Bristol VT
Attachments: Proposal Binder Bristol Town Center_GME_010918.pdf

Kevin – Thank you for the opportunity to provide the attached budget proposal for Bristol town Center. I apologize for the delay in getting this to you. I ended up including three equipment options for your consideration. One conventional Bioclere and two options using our hybrid AquaCELL MBBR / Bioclere system. Each option has advantages and disadvantages that may be more or less suited to site conditions and other factors such as depth of excavation, tank sizes, appearance and cost. For the hybrid MBBR I priced in duplex (duty & standby) high end Kaeser blowers w/ sound attenuation which are very quiet. If you are and the State are comfortable with a single blower and the lack of redundancy it will lower the cost of options # 2 & # 3 by $9,000. We design our own controls and program in energy save features for low flow periods. All options are relatively easy to operate and can be dialed in to actual flow conditions for max efficiency. It's tough to beat the stand alone Bioclere for quiet operation but the cost of fiberglass of the large BC units drives that price.

When you narrow in on a preferred approach we can provide the necessary design package and details.

Please contact me for discussion and with any questions or comments.

Thanks again.

Mark

Mark Lubbers
AQUAPOINT
AN GREEN COMPANY
39 Tarkiln Place
New Bedford, MA 02745
(m) 774 930 3900
(o) 508 985 9050 ext.105
mlubbers@aquapoint.com

AQUAPOINT
AN OBEH COMPANY

To: Kevin Camara, Green Mountain Engineering
Fr: Mark Lubbers, Aquapoint
Re: Bristol, VT
Date: Tuesday, January 9, 2018

Thank you for the opportunity to provide a preliminary proposal for the referenced project. We understand that the project involves treatment of mixed use commercial sanitary wastewater for Bristol Town center including at least two restaurants, one of which includes a small brewery. The treatment goal is to reduce the organic and suspended solids load in the system effluent to secondary treatment standards. Three treatment system equipment options are considered .

Notes & Assumptions

Preliminary design criteria provided on December 2017 via telephone communication.

(1) Design flow = 20,000 gpd. ADF = TBD;
(2) Collection system: Gravity
(3) Peaking factor = 4. Flow equalization is recommended to reduce PF to 2
(4) Year round operation
(5) Influent Characteristics: Commercial sanitary waste only as follows:

	pH	Temp	BOD (mg/l)	TSS (mg/l)	TKN (mg/l)	NH3 (mg/l)	TN (mg/l)	Fecal Coliform
Primary Settled Influent	6 – 9	10°C – 25°C	400	85	NA	NA		NA
Effluent	6 – 9		30	30		NA	NA	NA

APPROACH

Effluent from the gravity collection system is settled using an existing 40,000 gallon baffled tank. We propose to include flow equalization because we do not have detailed information on the anticipated flow regime and peaking factors (PF), and because flow from commercial operations such as restaurants often have higher peak loads than domestic sanitary waste. Flow displaced from the primary settling tank shall be equalized over 18 – 24 hours using timer based duplex, alternating pump system.

Option #1 - Dual stage Bioclere units in series.

Primary Settling ⟹ Flow equalization ⟹ Two Bioclere units in series ⟹ Discharge

Settled effluent is paced by a timer controlled duplex pump system into two Bioclere units arranged in series. The first stage Bioclere will initiate oxidation of BOD. The second stage Bioclere will polish the residual BOD and

provide final settling of suspended solids to meet the required effluent quality. Secondary sludge is transferred via an integral pump in the Bioclere clarifiers to the primary tank for storage prior to periodic removal from the site.

Aquapoint Supplied Equipment (Tanks by others unless specified)

- Flow equalization - Duplex SS submersible pump system complete with slide rail assemblies, floats and controls in NEMA 4 X enclosure.

- Two (2) Bioclere Model 36/20 units is series complete with integral clarifiers, duplex dosing pumps, recycle/ sludge return pump, aeration fan and controls in NEMA 4 X enclosure.

Schematic diagram

The following diagram is for purposes of illustration only and does not represent the actual scale or layout of the tanks and equipment. The Bioclere dimensions are as shown in the attached unit drawing.

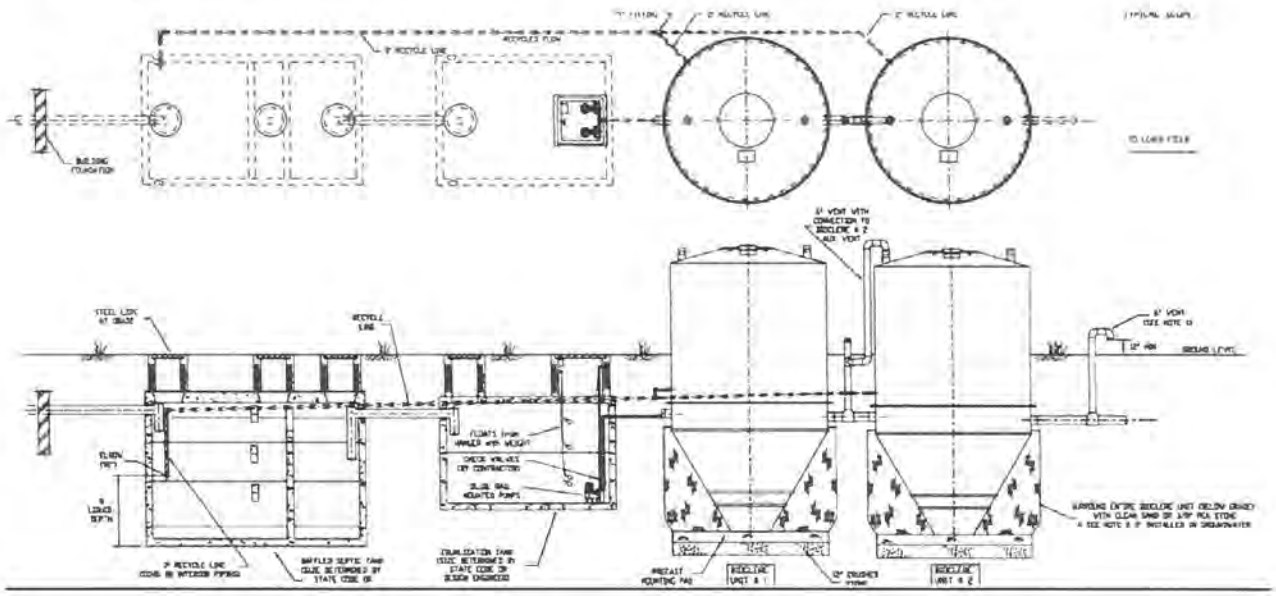

Budget Estimate: Option # 1

System equipment FOB Factory..... $ 128,000
Estimated Freight (to be confirmed prior to order)..... $ 5,000

Tanks & Equipment by Others

- (1) Existing 2- compartment 40,000 gal primary settling tank
- (1) Flow equalization tank (Minimum recommended capacity at 8,000 gallons)
- (2) Bioclere mounting pad (12 ft. diameter or square)

Required Electrical Service 115 & 230v / 1 phase / 60 Hz

Option # 2 – AquaCELL aerobic Moving Bed Biofilm Reactor (MBBR) followed by a single stage Bioclere unit.

Primary Settling ⟹ Flow equalization ⟹ AquaCELL MBBR ⟹ Model 36 Bioclere ⟹ Discharge ⟹

Wastewater flow from the facilities is to be settled and equalized. Equalized flow is transferred via pump to a single stage AquaCELL aerobic MBBR to oxidize BOD. Flow from the MBBR is displaced by gravity into a single stage Bioclere trickling filter to complete oxidation of BOD and settle secondary solids to produce the required effluent quality. Secondary sludge is transferred via an integral pump in the Bioclere clarifier to the primary tank for storage prior to periodic removal from the site.

Aquapoint supplied equipment:

- Flow equalization - Duplex SS submersible pump system complete with slide rail assemblies, floats and controls NEMA 4 X enclosure.

- AquaCELL Aerobic MBBR components: Requires 4800 gal. tank (by others). Approximate dimensions 8' Square x 10' SWD (12' OAH)
  - 8 m^3 AquaCELL 466 bio-film carriers
  - (1) Full floor Schedule 80 PVC medium bubble aeration grid/ diffusers
  - (1) SS Media retention screen
  - (2) Kaeser tri-lobe positive displacement blowers with sound attenuation (duty & standby)
  - Programmable Controls w/ VFD's NEMA 4 X enclosure.

- One (1) Bioclere model 36/20: Complete with media, duplex media dosing pumps, recycle pump, aeration fan and controls in NEMA 4X enclosure.

Schematic diagram: The attached diagram is for purposes of illustration only and does not represent the actual scale or layout of the tanks and equipment.

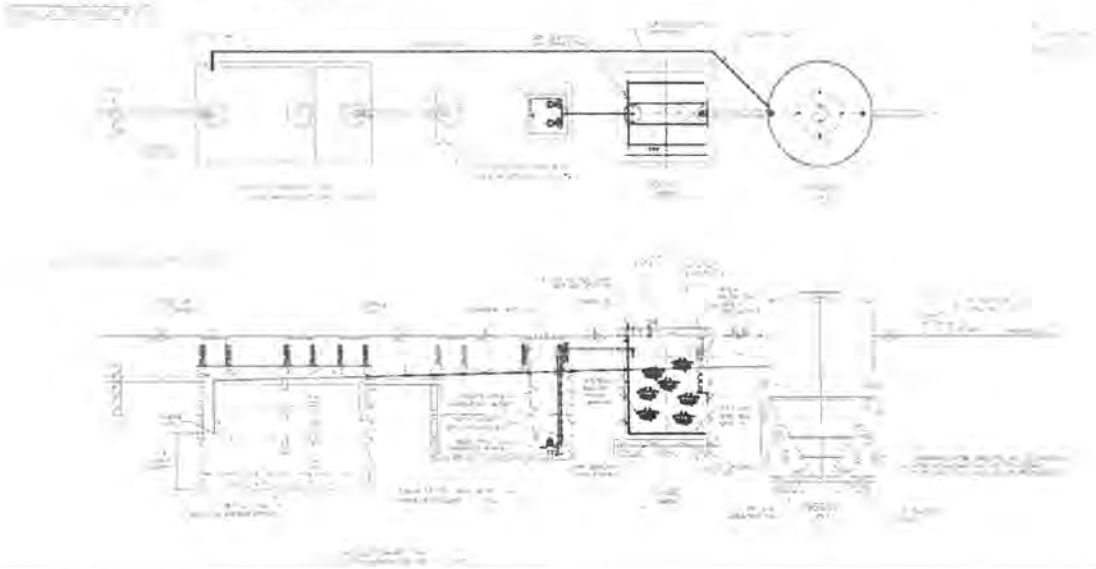

Budget Estimate: Option # 2

Aquapoint Pre-treatment MBBR / Bioclere equipment FOB Factory..... $ 116,000
Estimated Freight ..... $ 5,000

Option 2 - Tanks & Equipment by Others

- (1) Existing 2- compartment 40,000 gal primary settling tank
- (1) Flow equalization tank w/ 3' x 3' access hatch (Minimum recommended capacity at 8,000 gallons)
- (1) MBBR reactor tank w/ access hatch. (Approx. 4800 gal working volume (8' x 8' x 12')
- (1) Bioclere mounting pad (12 ft. diameter or square)

Required Electrical Service

Equalization & Bioclere system:	115 & 230v /1 Ph / 60 Hz
Aeration blower:	208-230v/ 3Ph / 60 Hz

Option # 3 – Pre-treatment with AquaCELL aerobic MBBR followed by two single stage Bioclere units in parallel.

Primary Settling ⟹ Flow equalization ⟹ AquaCELL MBBR ⟹ Flow Splitter ⟹ Two (2) Model 24 Bioclere units in parallel ⟹ Discharge

Equalized flow is transferred to a single stage AquaCELL aerobic MBBR to oxidize BOD. Flow from the MBBR is displaced by gravity and divided equally into two parallel single stage Bioclere trickling filters to complete oxidation of BOD and settle secondary solids to produce the required effluent quality. Secondary sludge is transferred via an integral pump in the Bioclere clarifier to the primary tank.

Aquapoint supplied equipment:

- Flow equalization - Duplex SS submersible pump system complete with slide rail assemblies, floats and controls NEMA 4 X enclosure.

- AquaCELL Aerobic MBBR components: Requires 6,000 gal. tank (by others). Approximate dimensions 10' square x 8' SWD (10' OAH)
    - 10 m^3 AquaCELL 466 bio-film carriers
    - (1) Full floor Schedule 80 PVC medium bubble aeration grid/ diffusers
    - (1) SS Media retention screen
    - (2) Kaeser tri-lobe positive displacement blowers with sound attenuation (duty & standby)
    - Programmable Controls w/ VFD's NEMA 4 X enclosure.
- One (1) Direct bury FRP flow divider manhole complete with baffles and adjustable weirs
- Two (2) Bioclere Model 24/20-1600 units complete with media, duplex media dosing pumps, recycle pump, aeration fan and controls in NEMA 4X enclosure.

Schematic diagram: The attached diagram is for purposes of illustration only and does not represent the actual scale or layout of the tanks and equipment.

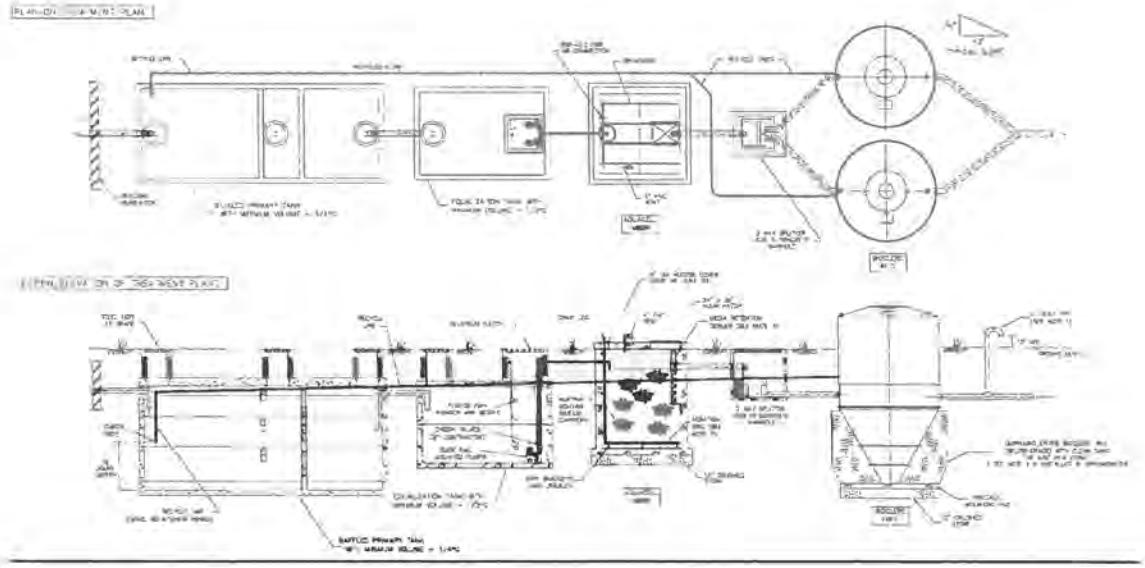

Budget Estimate: Option # 3

Aquapoint Pre-treatment MBBR / Bioclere equipment FOB Factory..... $ 114,000
Estimated Freight ..... $ 3,500

Option 3 - Tanks & Equipment by Others

- (1) Existing 2- compartment 40,000 gal primary settling tank
- (1) Flow equalization tank w/ 3' x 3' access hatch (Minimum recommended capacity at 8,000 gallons)
- (1) MBBR reactor tank w/ access hatch (Approx. 6,000 gal working volume (10' x 10' x 10')
- (2) Bioclere mounting pads (8 ft. diameter or square)

Required Electrical Service

Equalization & Bioclere system: 115v /1 Ph / 60 Hz
Aeration blower: 208-230v/ 3Ph / 60 Hz

Optional Equipment – (Pricing on request)

- Pre-fabricated seamless FRP flow equalization tank including all access ways, risers, covers, internal piping, platforms & pipe stub connections to field piping

- Pre-fabricated and assembled FRP MBBR reactor tank complete with access ways, cover, internal piping, diffusers and pipe stub connections to field piping

General Information

Installation

Only those items indicated above are included and will be furnished. Labor is not included. All other items will be furnished by others such as but not limited to: excavation, offloading, setting of tanks, electric service to control panels, collection & disposal system, finish grading, mounting and wiring pre-wired components, external piping, field erection, backfilling, water to fill tank, equipment & control building, fencing. Installations in ground water conditions require anti-floatation ballast backfill as necessary.

Additional Considerations & Review

This estimate reflects the design parameters as indicated above and assumes no other environmental factors that will adversely affect treatment. Toxic products inhibit or kill bacteria necessary for treatment and must not be discharged to the wastewater system.

This proposal represents our best efforts to be as complete and accurate as possible. However, due to assumptions made in the interest of generating a timely estimate it is provided for budget purposes only and cannot be used to purchase system equipment. After clarification of all necessary information including final approved plans and

permit(s), a firm equipment scope of supply and bid price will be provided for purchase of equipment. We are available to discuss this budget proposal to collaboratively devise a system that meets your needs.

In providing this estimate Aquapoint has relied exclusively on information provided by the addressee and on the assumptions stated herein. The addressee acknowledges and affirms that Aquapoint assumes no liability with respect to the addressee or any third party for the estimates.

Please provide final written confirmation of design specifications, site characteristics and treatment requirements.

Freight & Delivery

Pricing is FO B factory and does not include applicable taxes. Freight charges are estimated to be confirmed at the time of bid. Delivery is typically within 10 - 12 weeks of receipt of an order with deposit.

Equipment Warranty

Equipment supplied by Aquapoint, Inc is warranted against defects in materials and workmanship for one year from the date of installation or 18 months from the date of delivery. Extended warranties are available on request.

Thank you for your consideration. Please contact me with any questions or comments.

Mark Lubbers
Aquapoint.3 LLC

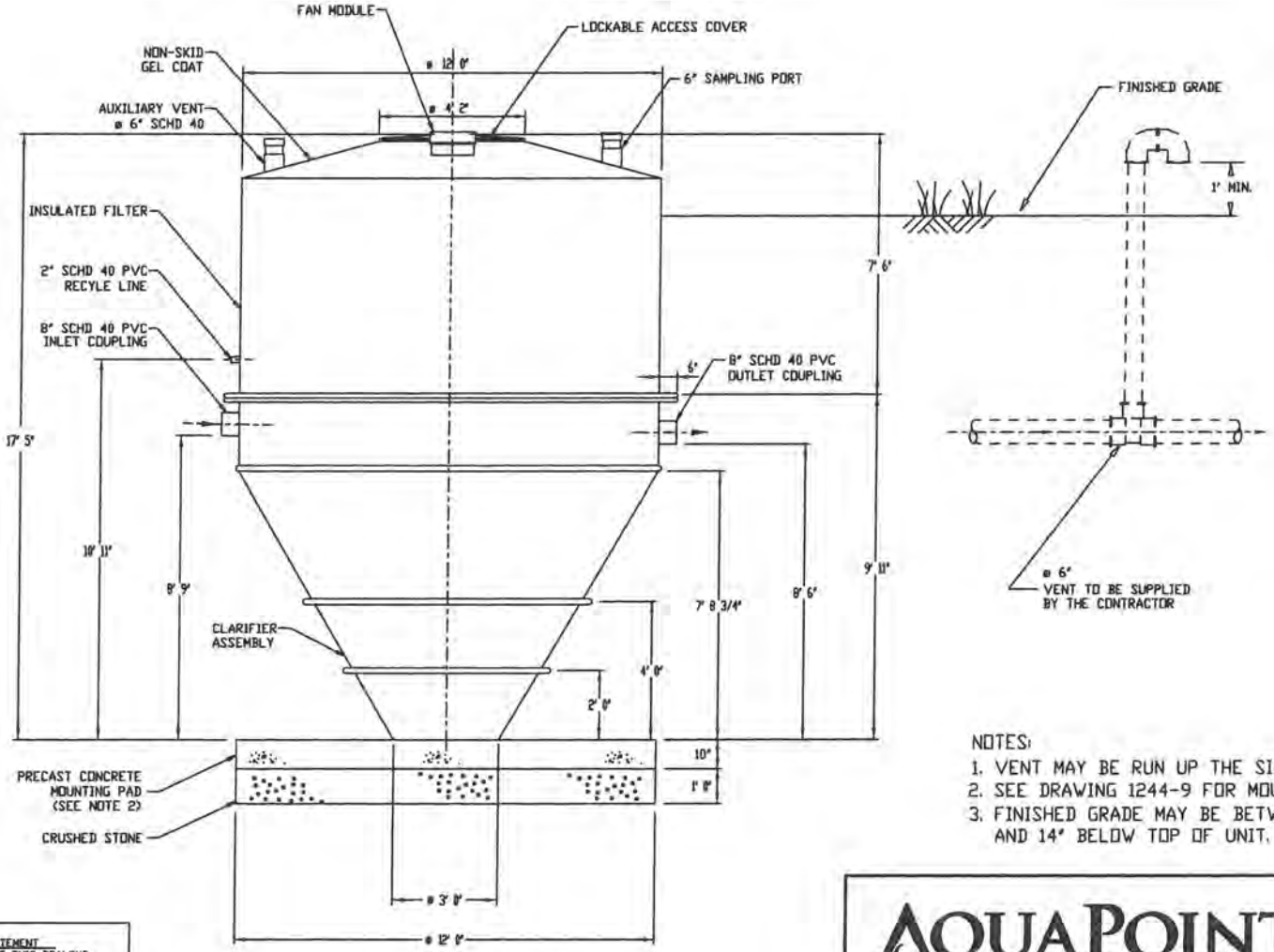

SHIPPING WEIGHTS
WEIGHT DRY WITH MEDIA = 4700 lbs
WEIGHT DRY WITH NO MEDIA = 3200 lbs

NOTES:

1. VENT MAY BE RUN UP THE SIDE OF BUILDING.
2. SEE DRAWING 1244-9 FOR MOUNTING PAD CONSTRUCTION DETAILS.
3. FINISHED GRADE MAY BE BETWEEN 18" ABOVE RECYCLE LINE AND 14" BELOW TOP OF UNIT.

36-20 GA.dwg

MODEL 36/20 BIOCLERE

AQUAPOINT
39 TARKILN PLACE
NEW BEDFORD, MA 02745
(508) 985-9050 FAX (508) 985-9072

TITLE:	BIOCLERE 36-20 GENERAL ARRANGEMENT
DRAWING NO:	UK.1263-16
REVISION	D
DATE:	May 9 2008
DWN BY:	P.Wiley
SCALE:	1 : 40 SIZE: B
SHEET #:	1 of 1

NOTES:
1. VENT MAY BE RUN UP THE SIDE OF BUILDING.
2. SEE DRAWING 1244-9 FOR MOUNTING PAD CONSTRUCTION DETAILS.
3. FINISHED GRADE MAY BE BETWEEN 18" ABOVE RECYCLE LINE AND 14" BELOW TOP OF UNIT.

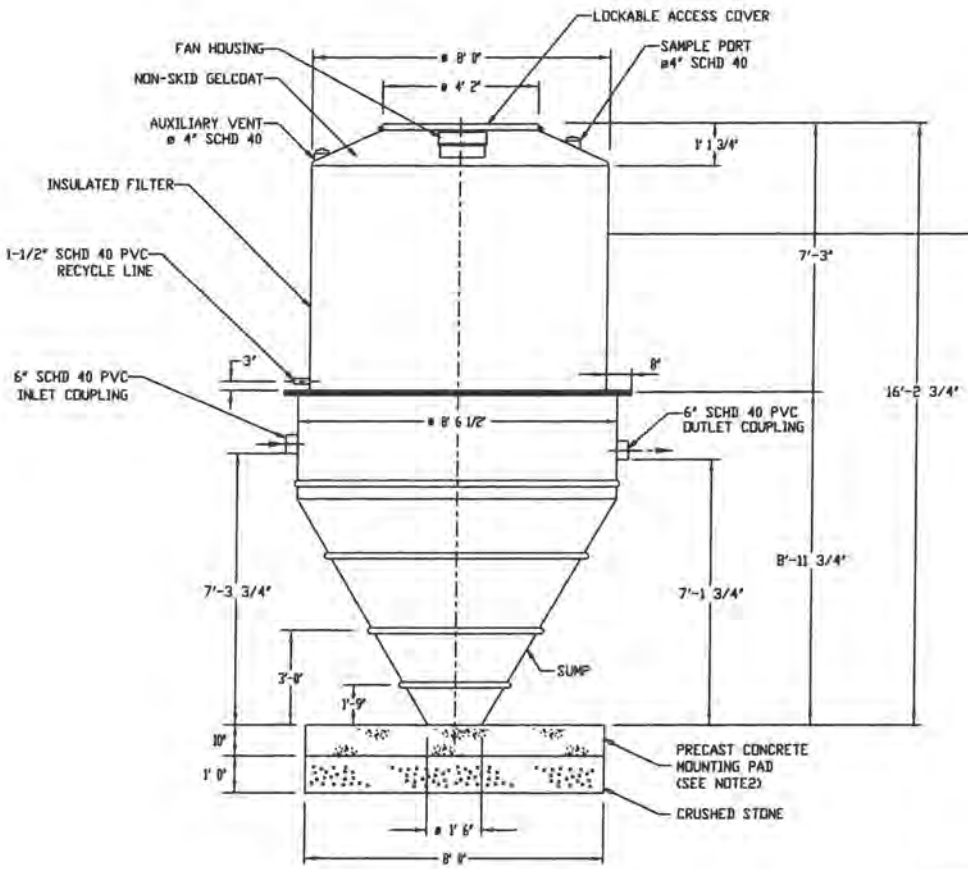

MODEL 24/20 BIOCLERE
WITH 1600 GALLON CLARIFIER

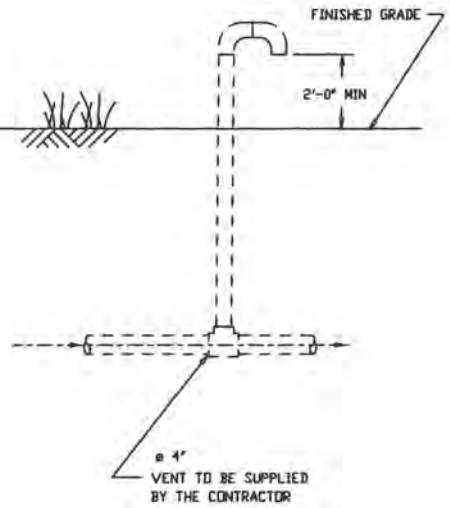

SHIPPING WEIGHTS
WEIGHT DRY WITH MEDIA = 2350 lbs
WEIGHT DRY WITH NO MEDIA = 1750 lbs

24-20+1600 snp GA.dwg

AQUAPOINT
39 TARKILN PLACE
NEW BEDFORD, MA 02745
(508) 985-9050 FAX (508) 985-9072

TITLE:	BIOCLERE 24/20-1600 GENERAL ARRANGEMENT
DRAWING NO:	UK.1261-3
REVISION:	C
DATE:	May 9 2008
DWN BY:	P.Wiley
SCALE:	1 : 40 SIZE: B
SHEET #:	1 of 1

AQUAPOINT
AN OBEH COMPANY


Biofilm Carriers

AQUACELL™ Wastewater Treatment Systems

Features & Benefits

- Treats Flows From 0.001 to 2 MGD
- Fixed-Film Process
- Small Footprint / Compact Design
- Cost Effective Plant Upgrades / Retrofits
- Modular Pre-constructed Systems
- Durable UV Resistant HDPE Biofilm Carriers
- Cold Climate Nitrification / Denitrification
- Minimal Sludge Generation
- Expandable & Flexible Design Arrangements
- Minimal O&M Requirements
- Fully Automated Systems
- Remote Monitoring Control Options

The AquaCELL Advantage

AquaCELL is a state of the art fixed-film moving bed biofilm reactor (MBBR) in which thousands of submerged polyethylene (HDPE) biofilm carriers operate in motion within an aerated or mechanically mixed basin. Each carrier element incorporates multiple protected cells with significant surface area to sustain a dense community of attached growth microorganisms. As the neutrally buoyant carriers move throughout the water column, oxygen and organic/inorganic material is available to the biofilm which absorbs, oxidizes and reduces the pollutants thus providing treatment. The dense population of bacteria provides high-rate productivity, enhanced nitrification/denitrification, process stability, small footprint and ease of operation.

Simple Operation

In attached growth MBBR systems, the bacteria in the biofilm is self-regulating and produces minimal sludge. These characteristics eliminate the need to actively manage mixed liquor suspended solids (MLSS), food to microorganism (F/M) ratios and return activated sludge (RAS). The result is a one pass treatment process that is easy to operate and highly reliable.

New Construction or Upgrades

AquaCELL treatment systems are available in a variety of materials and tank geometries. Reactors can be constructed of stainless, epoxy coated carbon steel, fiberglass or concrete and can be installed above ground or below grade. Aquapoint systems are pre-engineered and pre-constructed or custom designed to fit the specific requirements of your site. Additionally, AquaCELL can be designed to fit within the chambers of an existing plant making it a cost effective solution for capacity and/or performance upgrades.

Applications Include:

Residential, industrial and high strength waste streams - roughing reactors – nitrification & denitrification - retrofits and upgrades - sites with limited space and/or aesthetic concerns - sites requiring little operations oversight.

AQUACELL™

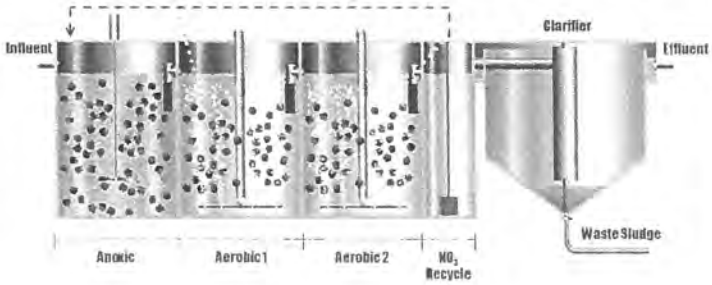

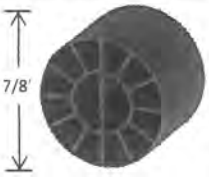

AquaCELL Biofilm Carriers are constructed of UV resistant HDPE plastic giving them durability and a long life span regardless of the application. Their neutral buoyancy is critical to effective mixing within a reactor and ultimately provides an increase in treatment efficiency. Each carrier has a large internal protected surface area for biological growth. The apertures are engineered to allow for adequate scouring velocities and sloughing before biological plugging occurs.

AquaCELL Design Configurations

Legend:

AN1 + AN2 = Anoxic
AR1 + AR2 = Aerobic
R = Recycle
RA = Re-Aeration
C = Clarifier
WS = Waste Sludge

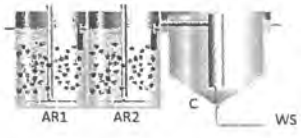

AquaCELL (AER)
< 20 mg/l BOD
< 20 mg/l TSS
< 1 mg/l NH_3-N

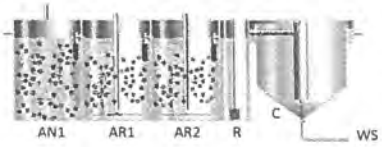

AquaCELL (MLE)
< 20 mg/l BOD
< 20 mg/l TSS
< 1 mg/l NH_3-N
< 10 mg/l TN

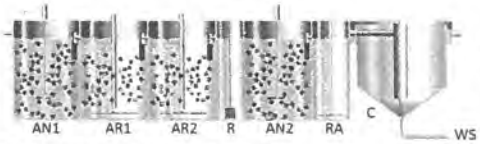

AquaCELL (ENR)
< 20 mg/l BOD
< 20 mg/l TSS
< 1 mg/l NH_3-N
< 3 mg/l TN

AQUAPOINT
AN OBEH COMPANY
39 Tarkiln Place
New Bedford, Massachusetts 02745
T: 508-985-9050 x105 (Sales) F: 508-985-9072
www.aquapoint.com

APPENDIX D – SEPTI-TECH PROPOSAL

Kevin Camara

From: Michael Jewell <mjewell@SDIRELAND.COM>
Sent: Tuesday, December 19, 2017 2:06 PM
To: Kevin Camara
Subject: Budget Number For Bristol WW Treatment System
Attachments: STAAR 18.0 INSTALLATION PLAN.PDF; STAAR 4.5 Concrete Tank.pdf; STAAR 4.5 Installation Schematic.pdf; STAAR 4.5 TOTAL TANK LAYOUT.PDF

Kevin
After going through all the parameters for this system with SeptiTech, the system that fits what you need is a STAAR 18. This system is comprised of (2) STAAR 4.5 systems (see attached sheets) that basically work as two separate systems. There would be a total of (4) 8000 gallon treatment tanks. The outside dimensions of each tank would be 9'wide x 17'long x 11'-4" tall, and will have approximately 1' of riser above the top of the tanks for cover material, each tank will also have (3) 30"x48" Aluminum hatches that will be mounted to the top each of the risers in the field by the contractor. The tanks will be two piece tanks and each half will weigh approximately 35,000lbs each and will need to be set by an outside crane service provided by the contractor. The first tank in each system with be a single compartment and have three pump back pumps, recirculation pump and will basically be full of roughing media, the two second tanks will be three compartment tanks and will have three pump back pumps, recirculation pump, discharge pump and will have roughing and polishing media. The flows from the septic with need to be equally split to go to the two systems this means the existing septic tank may need to have an additional outlet hole drilled in it or some other way to split the outlet flow. The septic tank will also most likely need to have a hole cored to receive the pump back pipes. The contractor will be responsible for all the digging/setting of the tanks, coring any holes in any existing structures, running any exterior pipes, all dirt work related to the system, running conduit and getting the system wired.

The budget price for this system would be $184,260.00. This price includes the (4) 8000 gallon tanks risers/hatches and trucking to get them two Bristol, the entire internal components and installation of the internal components (will most likely take 4 days to install internals at the site). The price also includes the startup of the system by SDI and Advanced Onsite Services as well as a 6 month and 1 year inspection. The price does not include any sampling by SDI or Advanced Onsite Services.
In discussion with SeptiTech they are very confident that this system will perform well under the conditions that you gave us. They also mentioned that if you wanted to lower the Nitrogen levels, that can be added to the system for additional $4800.

The total cost on this system could change given fill depths, site conditions and any other unforeseen changes that may come up.

Let me know if you have any questions or need an explanation on any of this please give me a call.

Thanks

Michael Jewell
Precast Sales/Estimating
S. D. IRELAND Companies
P 802-863-6222 x283
F 802-658-6869
mjewell@sdireland.com

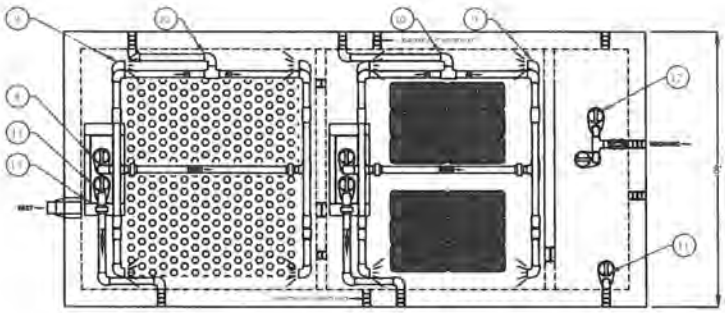

TOP VIEW

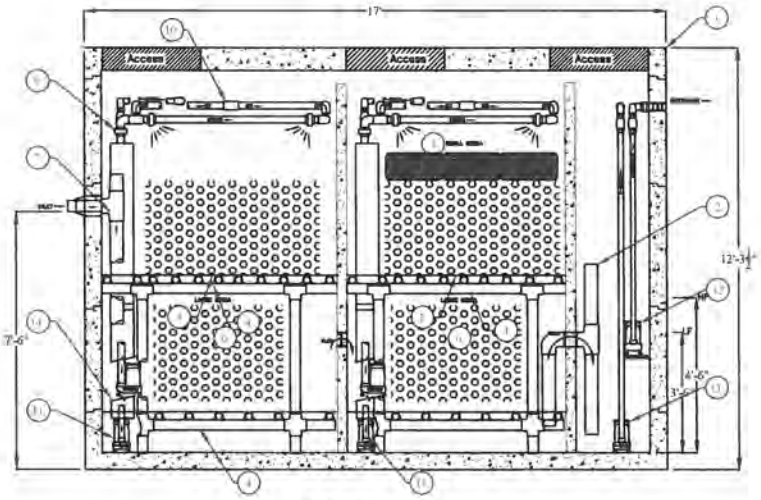

ELEVATION VIEW

FLOW

ITEM	QTY	PART NO	DESCRIPTION
14	2	#####	Pump Back Chute Assembly
13	2	#####	Pump Chute Assembly
12	1	#####	Duel Discharge Pump Assembly
11	3	#####	Pump Back Pump
10	2	#####	Blaster Air Heater Assembly
9	2	#####	Blaster Assembly
8	2	#####	Recirc Pump
7	1	#####	Inlet Piping Assembly
6	2	#####	Large Media
5	2	#####	Small Media
4	4	#####	Support Structure
3	2	#####	Screening Assembly
2	1	#####	Interior Piping Assembly
1	1	#####	8000 Gal. Concrete Tank

SeptiTech® a subsidiary of Bio-Microbics, Inc.

DES.BY: DRR
DR.BY: JSC
CK.BY: WDR

PROJECT NO.:

STAAR 4.5
TOTAL TANK LAYOUT

DATE: 03/04/02
DWG. NO.:
SCALE: 1/4"=1'-0"
REV.: 1

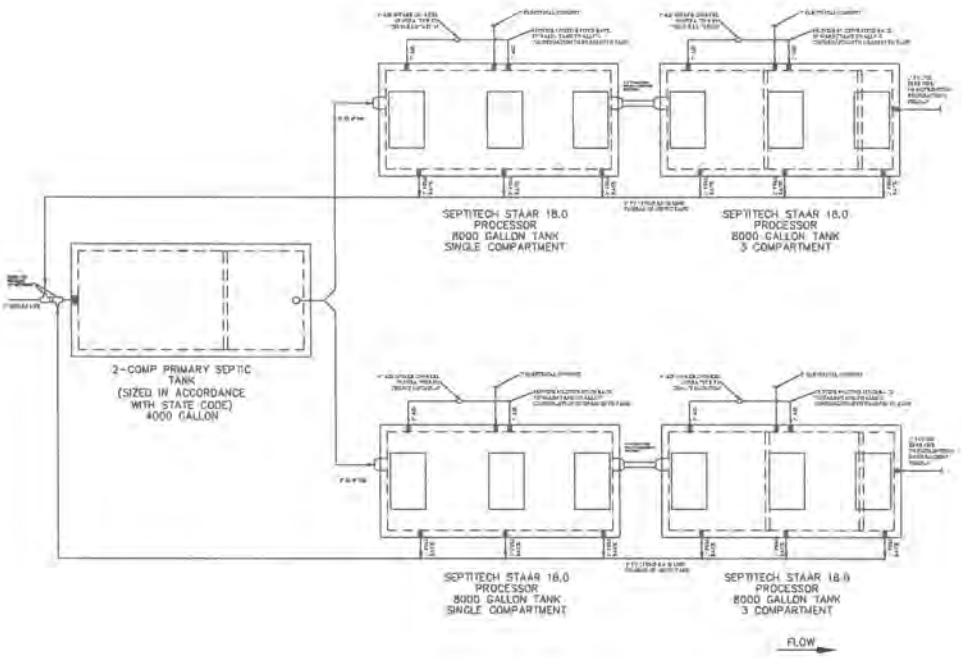

GENERAL NOTES

- Tank(s) shall not be installed at a depth any greater than 24-inches. Tank installations requiring a depth greather than 24-inches shall do so with prior approval by SeptiTech only. Any risers required to bring the aluminum hatches to grade are the responsibility of the contractor.
- Tank(s) shall be installed with a minimum of 12-inches of compacted crushed stone bedding. Select fill shall be used for backfilling around tanks. Native material may be used if approved by the design engineer.
- Water Testing: Contractor is responsible for water testing the concrete tank(s) once the tank(s) installation has been completed and allowed to set overnight. Water testing shall be conducted in accordance with ASTM C1227.9.2. Installing contractor shall be responsible for providing clean water for the testing, filling the tanks, and pumping the tanks dry once testing is completed.
- Exterior Piping: Contractor is responsible for supplying and installing all exterior piping per SeptiTech installation drawings.
- Air Intake Piping: Air intake snorkel shall be installed within 100 feet of the processor tank. Air intake piping shall be installed such that a positive pitch is provided back towards the processor tank such that any condensation build up is free to drain.
- Pipe Insulation: Contractor is responsible for insulating all piping exterior to the SeptiTech processor including the discharge line from the processor to the disposal field.
- Tank Insulation: After concrete tanks have been installed and water testing is completed, contractor shall insulate the top and sides of the processor tank below frost depth (4-feet minimum) down the sides of the tank with 2" rigid foam (blue) board insulation and then complete backfilling. Contractor is also responsible for installing insulation over the top of the forcemain from the SeptiTech system to the disposal field if not buried below frost level in order to prevent freezing.
- Electrical: All electrical work is the responsibility of the contractor's licensed electrician and is not provided by SeptiTech. System Controller should be installed in a heated building where an ambient temperature range of 60 to 90 degrees F is maintained. If the control panel must be located outside, please notify SeptiTech, Inc. so a heater may be installed within the enclosure.

  SeptiTech processors can also be built to 3-phase power requirements. If 3-phase is required, please notify SeptiTech at the time of contract signing.
- Internet: Contractor is responsible for installing a internet line to the processor control panel for the Telemetry. Any work performed on the system without the installation of the internet line shall be at the expense of the owner.

SeptiTech a subsidiary of Bio-Microbics, Inc	DES.BY: JSC
	DR.BY: JSC
	CK.BY: DAR
	PROJECT NO.:
STAAR 18.0 PROCESSOR INSTALLATION PLAN	
DATE: 01/11/18	DWG. NO.:
SCALE:	REV: 1

STAAR 4.5 Processor Tank

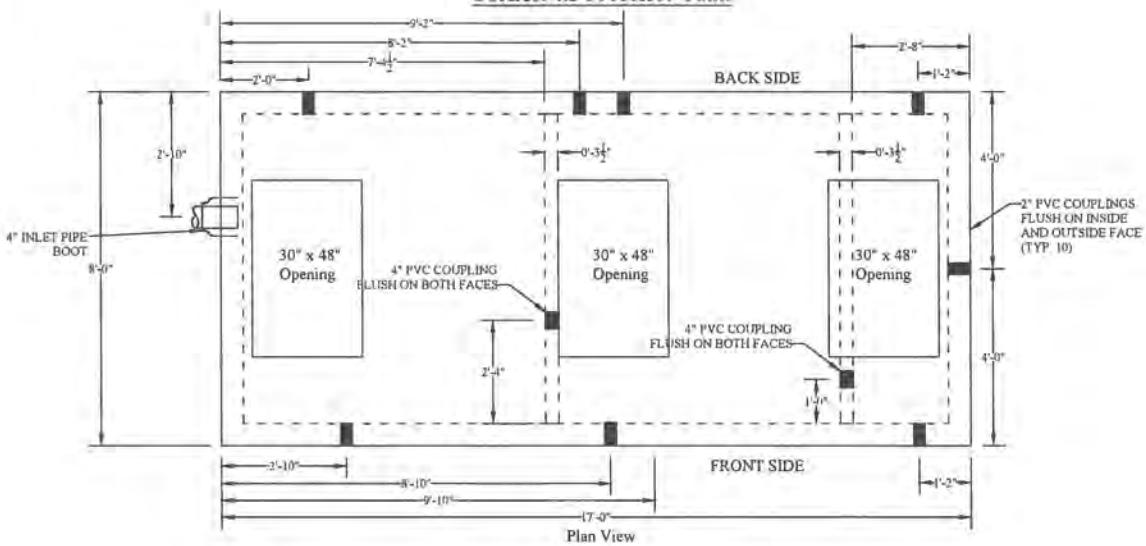

Plan View

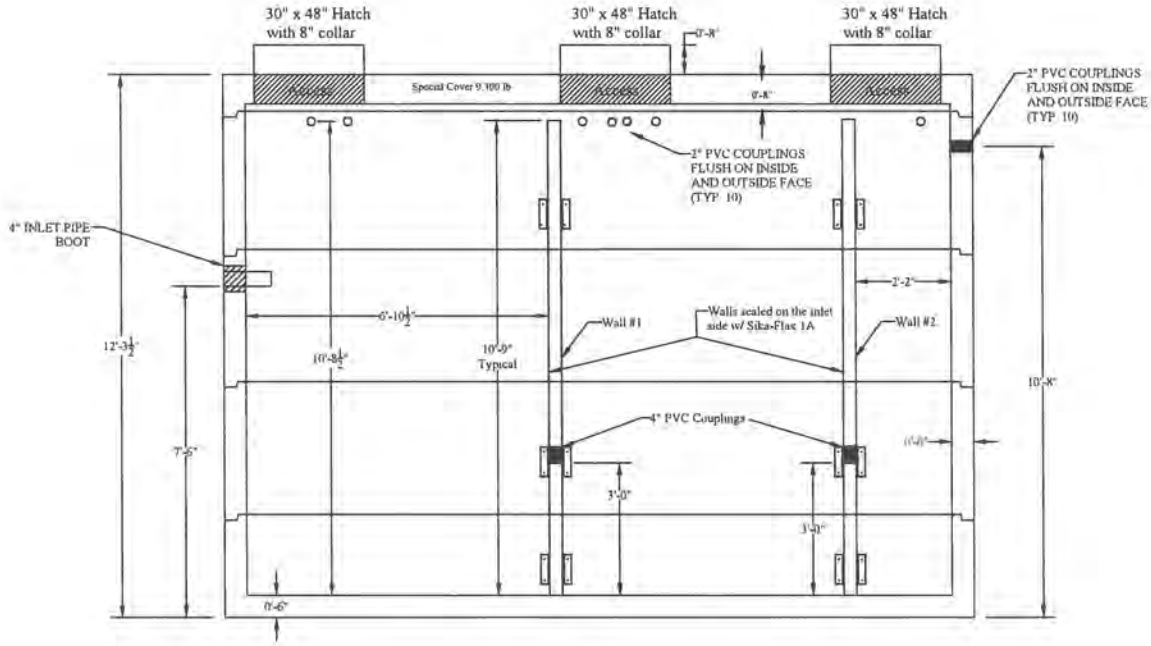

SeptiTech® a subsidiary of Bio-Microbics, Inc.	DES.BY:
	DR.BY:
	CK.BY:
	PROJECT NO.:
STAAR 4.5 PROCESSOR TANK 8,000 GALLON CONCRETE	
DATE: 09/16/08	DWG. NO.:
SCALE: 3/8"=1'-0"	REV.:

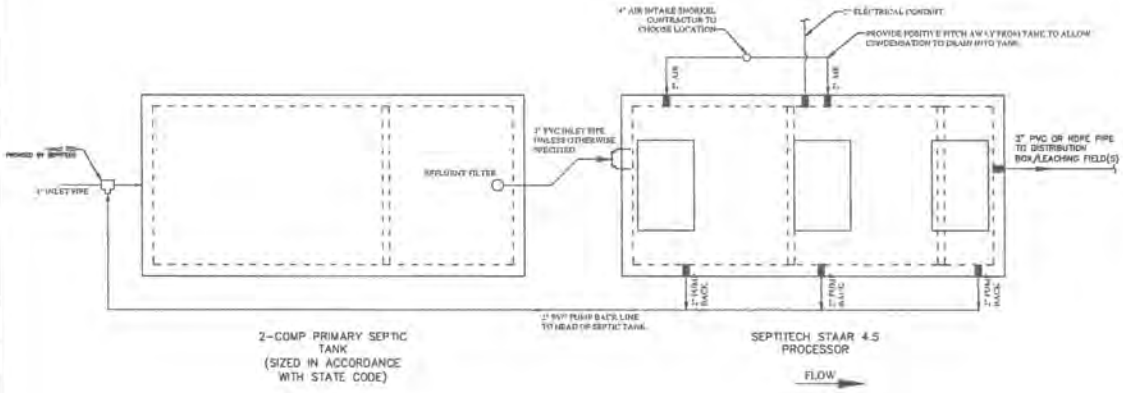

GENERAL NOTES:

- Tank(s) shall not be installed at a depth any greater than 24-inches. Tank installations requiring a depth greater than 24-inches shall do so with prior approval by SeptiTech only. Any risers required to bring the aluminum hatches to grade are the responsibility of the contractor.
- Tank(s) shall be installed with a minimum of 12-inches of compacted crushed stone bedding. Select fill shall be used for backfilling around tanks. Native material may be used if approved by the design engineer.
- Water Testing: Contractor is responsible for water testing the concrete tank(s) once the tank(s) installation has been completed and allowed to set overnight. Water testing shall be conducted in accordance with ASTM C1227 9.2. Installing contractor shall be responsible for providing clean water for the testing, filling the tanks, and pumping the tanks dry once testing is completed.
- Exterior Piping: Contractor is responsible for supplying and installing all exterior piping per SeptiTech installation drawings.
- Air Intake Piping: Air intake snorkel shall be installed within 100 feet of the processor tank. Air intake piping shall be installed such that a positive pitch is provided back towards the processor tank such that any condensation build up is free to drain.
- Pipe Insulation: Contractor is responsible for insulating all piping exterior to the SeptiTech processor including the discharge line from the processor to the disposal field.
- Tank Insulation: After concrete tanks have been installed and water testing is completed, contractor shall insulate the top and sides of the processor tank below frost depth (4-feet minimum) down the sides of the tank with 2" rigid foam (blue) board insulation and then complete backfilling. Contractor is also responsible for installing insulation over the top of the forcemain from the SeptiTech system to the disposal field if not buried below frost level in order to prevent freezing.
- Electrical: All electrical work is the responsibility of the contractor's licensed electrician and is not provided by SeptiTech. System Controller should be installed in a heated building where an ambient temperature range of 60 to 90 degrees F is maintained. If the control panel must be located outside, please notify SeptiTech, Inc. so a heater may be installed within the enclosure.

  SeptiTech processors can also be built to 3-phase power requirements. If 3-phase is required, please notify SeptiTech at the time of contract signing.
- Internet: Contractor is responsible for installing a internet line to the processor control panel for the Telemetry. Any work performed on the system without the installation of the internet line shall be at the expense of the owner.

SeptiTech® a subsidiary of Bio-Microbics, Inc.	DES.BY: JSC
	DR.BY: JSC
	CK.BY: DRR
	PROJECT NO.:
STAAR 4.5 PROCESSOR INSTALLATION PLAN	
DATE: 03/16/07	DWG. NO.:
SCALE: 1/4"=1'-0"	REV: 0

APPENDIX E – FAST PROPOSAL

Kevin Camara

From: Mark Pfenning <mpfenning@campprecast.com>
Sent: Monday, January 22, 2018 10:09 AM
To: Kevin Camara
Subject: RE: Bristol Proposed Treatment System

Hi Kevin,

I wanted to follow up on your request for the equipment cost on the Biomicrobics MYFAST 4.0 components.

I am excluding the 40,000 gallon +- cast in place concrete chamber, all labor for assembly, electrical, O & M Service Contracts, sampling & testing etc.

MYFAST BASIC 4.0 : Suggested Retail $102,900.00
Includes MYFAST liners, blower, control panel, sludge pump, biosolids collection grid, Sanitee 1618 screens.

Aeration Management System (AMS Aeration Option) 4.0: Suggested Retail $7,313.00
Includes LIXOR Aeration, Control panel & blower.

Biosolids Management System (BMS Option) 4.0: Suggested Retail $5,464.00
Includes LIXOR aeration, control panel, blower, decant pump & jib crane.

MyTee Option 4.0: Suggested Retail $1,410.00

Please let me know if you need anything else in this regard.

Best,

Mark Pfenning

Camp Precast

117,087 + 15% = $135,000

USE $120,000 FOR CAST IN PLACE TANK

From: Kevin Camara [mailto:kcamara@gmeinc.biz]
Sent: Tuesday, January 16, 2018 3:19 PM
To: Mark Pfenning
Cc: Joe Rebori
Subject: RE: Bristol Proposed Treatment System

Mark,

I never received the budget quotation. Can you send me that?

Kevin

MyFAST® 4.0 BASIC

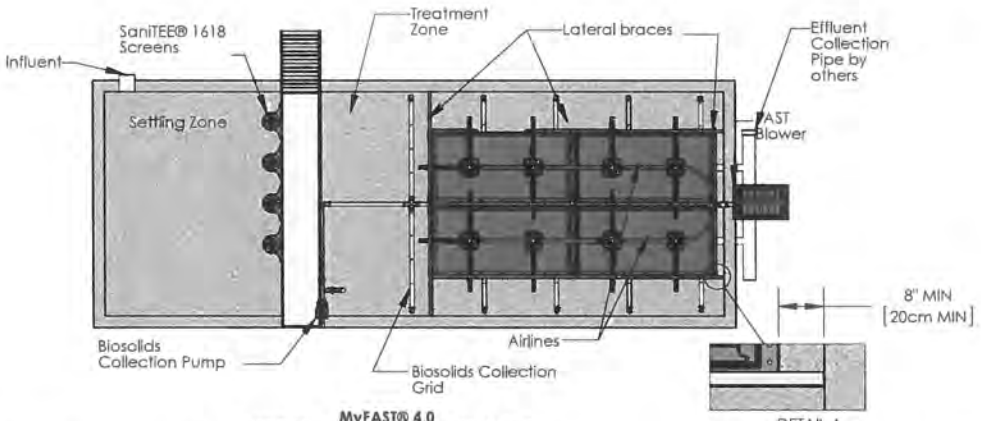

MyFAST® 4.0 OPTIONAL: MyTEE®Screen, AMS & BMS

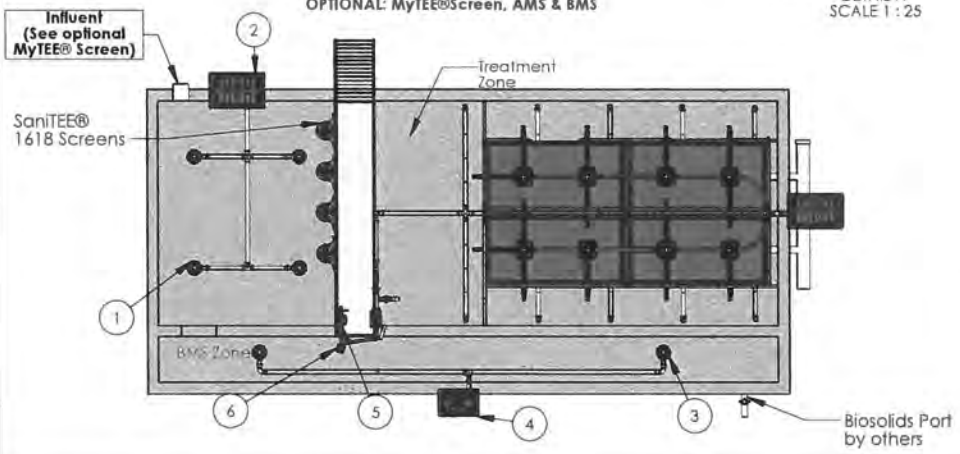

Product Description & Layout

MyFAST® 4.0 BASIC

Designed to treat approximately 40,000 GPD (150 m3/day) of residential waste water. For non-residential or mixed use applications, consult the factory for guidance.

- (4) MyFAST® Liners
- (4)SaniTEE® 1618 Screens
- Blower & Blower housing
- Control Panel
- Air Distribution Assembly
- Biosolids Collection Grid
- Biosolids Collection Pump valves and manifold
- (4) Lateral braces

OPTIONS

Aeration Management System (AMS)

LIXOR® aeration system provides oxygen and mixing, reducing primary sludge.

1. LIXOR® 4.0 XD
2. Blower & Blower Housing
- Control Panel

Biosolids Management System (BMS)

LIXOR® aeration system to reduce biosolids quantity.

3. LIXOR® 2.0
4. Blower & Blower Housing
5. Jib Crane
6. Decant Pump
- Control Panel

MyTEE®Screen

A prescreening device is required prior to AMS Zone. MyTEE® screen provides separation of non-biological solids and grit.

See sheet 5 of 8 MyTEE® Screen

DO NOT SCALE

UNLESS NOTED DIMENSIONS ARE IN INCHES [CENTIMETERS] TOLERANCES ± 0.02 IN/IN [± 0.05 CM/CM]

BIO MICROBICS
BETTER WATER. BETTER WORLD.

MyFAST 4.0

WEIGHT	lb	SIZE	DRAWING NUMBER	
NAME	DATE	A	Layout	SHEET 1 OF 8
DRAWN CTC	3/27/2009			
CHECKED PF	9/19/2013	REVISED 9/19/2013	REV. IN1-10-T	

MyFAST® 4.0 TANK DETAILS

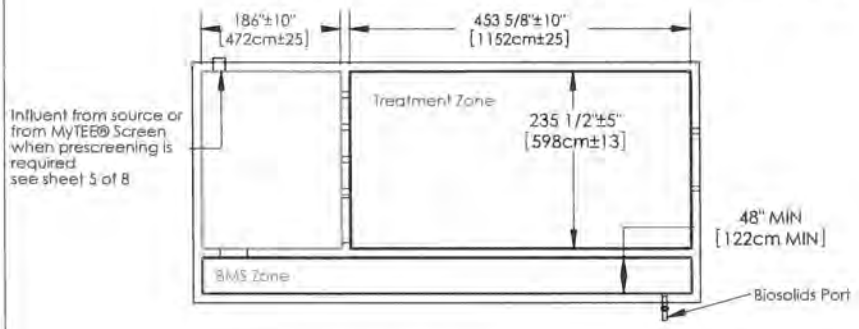

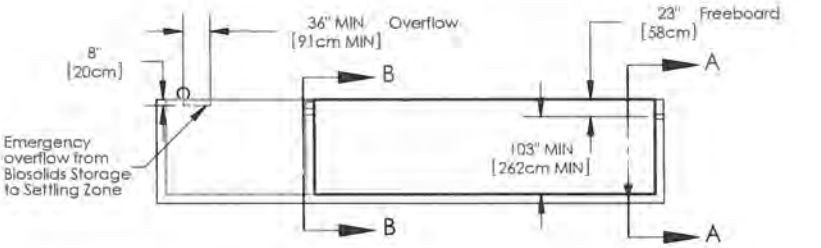

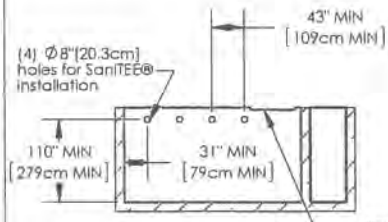

SECTION B-B

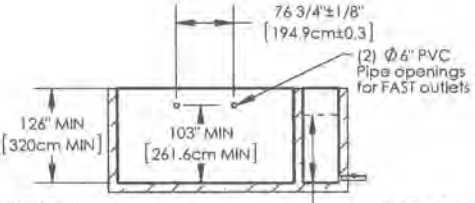

SECTION A-A

Lid Access Requirements
detailed drawings available upon request

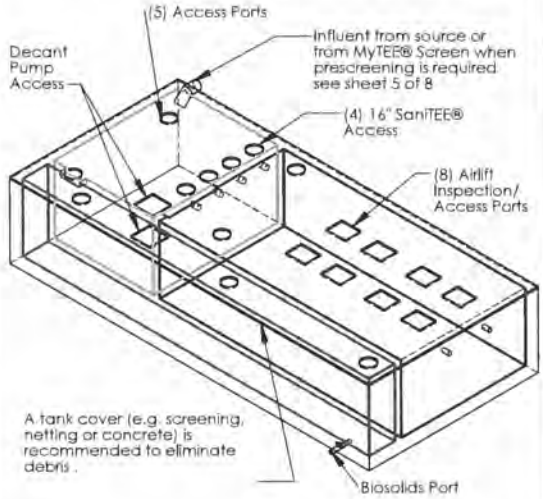

NOTES:
When tank is covered adequate ventilation will be required, refer to the BASIC, AMS, & BMS Specification sheets for additional details.

DO NOT SCALE

UNLESS NOTED DIMENSIONS ARE IN INCHES [CENTIMETERS] TOLERANCES ± 0.02 IN/IN [± 0.05 CM/CM]

BIO MICROBICS
BETTER WATER BETTER WORLD

MyFAST 4.0

WEIGHT	lb	SIZE	DRAWING NUMBER	
NAME	DATE	A	Tank Details	SHEET 2 OF 8
DRAWN CTC	8/27/2009			
CHECKED PF	9/19/2013	REVISED 9/19/2013	REV. IN-NOS-X	

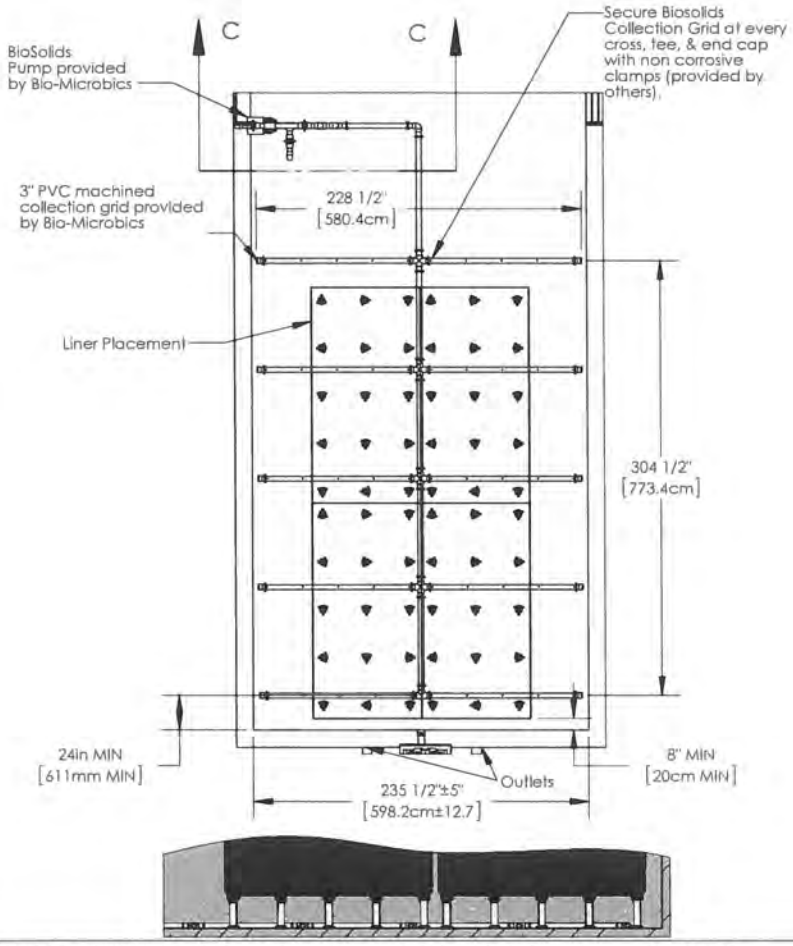

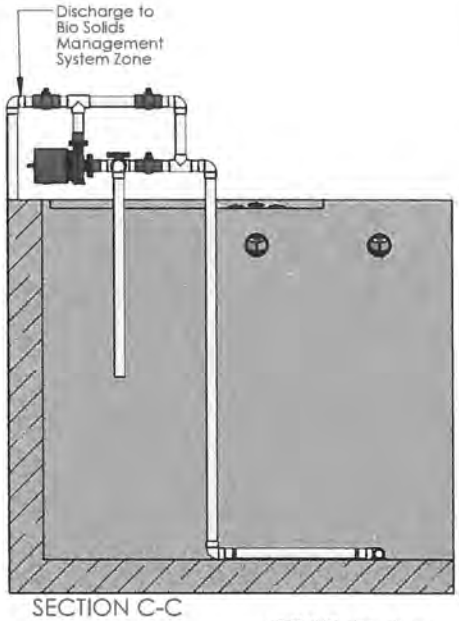

SECTION C-C

All 3" PVC pipe shown in Section C-C will be provided by others.

DO NOT SCALE

UNLESS NOTED DIMENSIONS ARE IN INCHES [CENTIMETERS] TOLERANCES ± 0.02 IN/IN [± 0.05 CM/CM]

BIO MICROBICS
BETTER WATER. BETTER WORLD.

MyFAST 4.0

WEIGHT	lb	SIZE	DRAWING NUMBER	
NAME	DATE	A	Biosolids Collection System	SHEET 3 OF 8
DRAWN CTC	3/27/2009			
CHECKED PF	9/19/2013		REVISED 9/19/2013	REV. INI-10-T

Biosolids Management System (BMS) Option

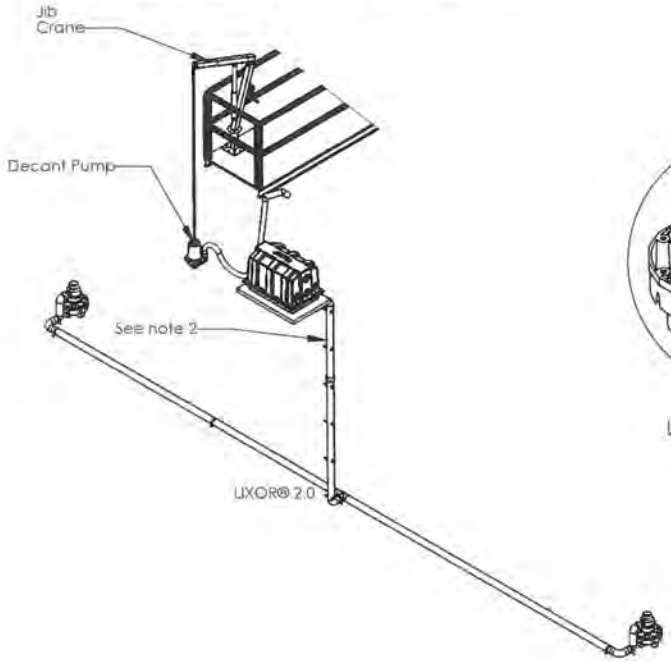

Aeration Management System (AMS) Option

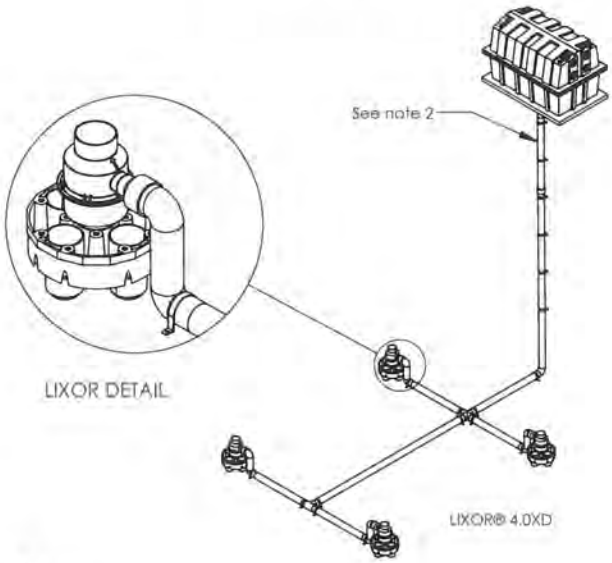

NOTES

1. Blower piping to LIXOR® may not exceed 100 FT (30.5m) in total length and use a maximum of 6 elbows, to get to the LIXOR air inlet. For distances greater than 100 FT (30.5m) - consult factory. Blower must be located above flood/standing water levels on a concrete base 36" X 58" X 2" (91X147X5cm) minimum.
2. The air supply line must be secured with a non-corrosive clamp every 2' (0.6m) minimum to prevent vibration induced damage.
3. Refer to sheet 7 of 8 & 8 of 8 for additional details.
4. Installation of the LIXOR® shall be done in accordance with the written instructions provided by the manufacturer. Refer to LIXOR® Installation Manual for more details.

DO NOT SCALE

UNLESS NOTED DIMENSIONS ARE IN INCHES [CENTIMETERS] TOLERANCES ± 0.02 IN/IN [± 0.05 CM/CM]

BIO MICROBICS
BETTER WATER. BETTER WORLD.

MyFAST 4.0

WEIGHT	lb	SIZE	DRAWING NUMBER	
NAME	DATE	A	Options	SHEET 4 OF 8
DRAWN CTC	3/27/2009			
CHECKED PP	9/19/2013	REVISED 9/19/2013	REV. INI-10-T	

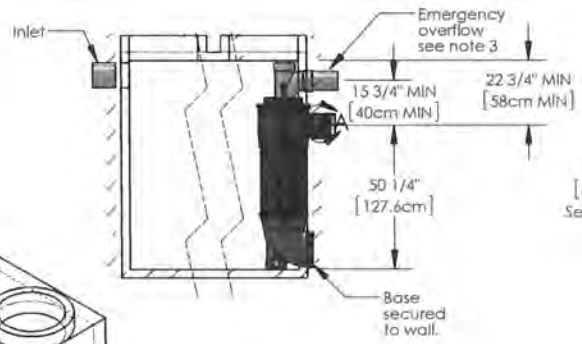

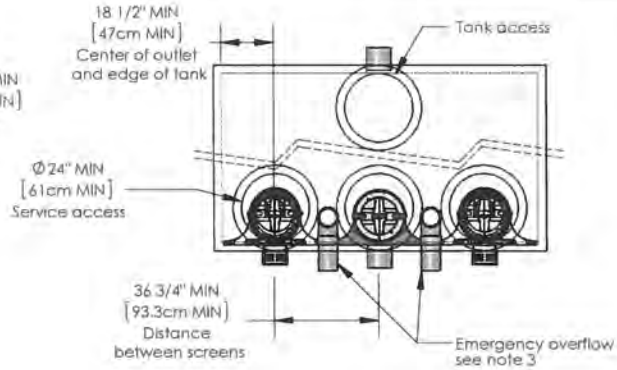

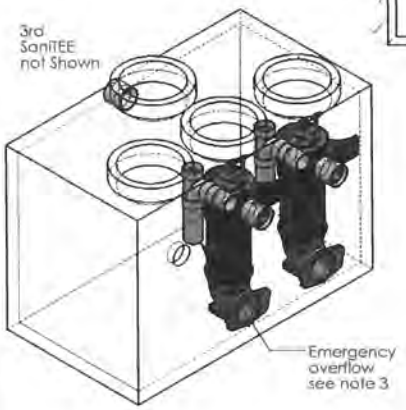

NOTES:

1. MyTEE® screens provide separation of non-biological solids and grit.
2. Each 1638 MyTEE® unit should be placed under a 24"[61cm] Ø riser for proper operation of the internal and external swabs.
3. Tank inlet flow line must be at least 2" above the emergency overflow outlet flow line. Emergency overflow must be sized to handle the designed peak flow event.
4. See table for required MyTEE® quantities and maximum tank volume.
5. Outlet pipe not included.
6. All appurtenances to MyTEE® (e.g. septic tank, access risers, etc) must conform to all applicable codes.
7. See additional details in MyFAST® Installation Manual.

MyTEE® 1638 Screen

Flow	Maximum Tank Volumes	MyTEE® Quantity
20 000 GPD [76 m3/Day]	(1) 2500 gallon [10m3] tank	2
40 000 GPD [150 m3/Day]	(1) 5000 gallon [19m3] tank	2
60 000 GPD [230 m3/Day]	(1) 7500 gallon [28m3] tank	3
80 000 GPD [300 m3/Day]	(1) 10000 gallon [38m3] tank	4
120 000 GPD [454 m3/Day]	(1) 15000 gallon [55m3] tank	6
160 000 GPD [600 m3/Day]	(1) 20000 gallon [75m3] tank	8

If installed as shown in a single compartment tank the 8" PVC pipe must be water tight within the tank and flush against the inside to mount 16" MyTEE® bottom diverter

DETAIL A

Outlet optional 8" PVC pipe provided by others to connect outlet to secondary tank

DO NOT SCALE

UNLESS NOTED DIMENSIONS ARE IN INCHES [CENTIMETERS] TOLERANCES ± 0.02 IN/IN [± 0.05 CM/CM]

BIO MICROBICS
BETTER WATER. BETTER WORLD.

MyFAST 4.0

WEIGHT	lb	SIZE	DRAWING NUMBER	
NAME	DATE	A	MyTEE®	SHEET 5 OF 8
DRAWN CTC	3/27/2009			
CHECKED PF	9/19/2013	REVISED 9/19/2013	REV. IN-01-Q	

Specifications for MyFAST® 4.0 BASIC Wastewater Treatment System

1. **GENERAL**
The MyFAST® 4.0 treatment system is designed to treat approximately 40,000 GPD (151 m3/day) of residential strength wastewater. For non-residential or mixed use applications, consult the factory for guidance.The principal items of equipment shall include four (4) FAST® interconnecting liners with leg attachments, airlifts, hoses, biosolids collection manifold, sludge pump, four (4) SaniTEE® screens, blower assembly, and control panel. The MyFAST®4.0 treatment unit shall be situated within a 40,000 gallon (151 m3) minimum tank, as shown on the plans. Settling tank(s)/AMS Zone equaling ½ to 1x daily flow must be used prior to MyFAST®. Tank(s) provided must conform to local, state, and all other applicable codes. The tank is to be supplied by others according to Bio-Microbics dimensions.

2.**BLOWER**
The blower shall be capable of delivering 400 to 700 CFM [680 - 1190 m3/hr]. The blower assembly shall include an inlet filter with metal filter element. The blower shall be mounted outside the tank adjacent to the Treatment Zone on a contractor supplied concrete base. The blower elevation must be higher than the water level in the tank and above any normal flood level. A two-piece, blower housing shall be provided with tamper-proof screws. Blower piping to the tank shall use non-corrosive material (Galvanized or Stainless Steel). Do not run galvanized pipe inside the treatment tank. Refer to installation manual for further details. The 4 inch NPT Steel discharge air line, MyFAST® 4 inch NPT air header and connections shall be provided and installed by others.

3. **VENTILATION**
Vent to desired location and cover opening with a vent grate with at least 120 sq in. [775 sq. cm] open surface area. Secure with Stainless Steel screws. Vent piping must not allow condensate build up or create back pressure. Vent must be above finished grade or higher.

4. **ELECTRICAL/CENTRAL CONTROL PANEL**
All wiring must conform to code and provide the specified power to the blower. Input power on 60Hz electrical system is 208-230/460 VAC, three phase, 63/34.8 FLA. Input power on 50Hz electrical systems 220/400 VAC, three phase 60/34.8 FLA. All conduit and wiring required on the project shall be supplied by others. The standard control panel shall utilize motor starters and overloads to be housed in a NEMA 4 X enclosure. The control panel shall be equipped with a visual and audible alarm to indicate loss of power to the blower. A manual silence switch is included.

5. **BIOSOLIDS COLLECTION ASSEMBLY**
A Biosolids Collection Assembly will be located underneath the MyFAST® 4.0 liners. The collection assembly consisting of; a collection grid, (trunk line, valves, five lateral lines with engineered orifices), biosolids manifold, and biosolids pump. The contractor shall supply piping to connect the grid to the biosolids pump and to construct the manifold. A field adjustable event timer will control the duration and frequency of the biosolids wasting from the Treatment Zone. The biosolids collection system is reversible to facilitate back flush operations.

6. **MEDIA**
The MyFAST® media shall be manufactured of rigid PVC, polyethylene, or polypropylene and it shall be supported by the polyethylene insert. The media shall be fixed in position and contain no moving or wearing parts and shall not corrode. The media shall be designed and installed to ensure that sloughed solids descend through the media to the bottom of the tank.

7. **FLOW & PIPE SIZING**
Each MyFAST® 4.0 has two (2) six (6) inch gasketed effluent connections. Each effluent connection has a maximum unrestricted flow of 250 US GPM (945 LPM with a 2.0 design safety factor. MyFAST® systems have been successfully designed and tested receiving gravity and demand-based influent flow. When influent flow is controlled by pump or other means to help with highly variable flow conditions, then multiple dosing events should be used to maximize performance. For residential strength waste the flow rate shall not exceed 140 gpm (530 Lpm) and a maximum hourly flow not to exceed 10% of the design daily flow. For non-residential or mixed use applications, consult the factory for guidance.

8. **WARRANTY**
Bio-Microbics, Inc. warrants all new MyFAST® models (MyFAST® 2.0, 4.0, 6.0, 8.0, 12.0, and 16.0) against defects in materials and workmanship for a period of one year after installation or eighteen (18 months) from the date of shipment whichever occurs first, subject to the following terms and conditions:
During the warranty period, if any part is defective or fails to perform as specified when operating at design conditions, and if the equipment has been installed and is being operated and maintained in accordance with the written instructions provided by Bio-Microbics, Inc., Bio-Microbics, Inc. will repair or replace at its discretion such defective parts free of charge. Defective parts must be returned by owner to Bio-Microbics, Inc.'s factory postage paid, if so requested. The cost of labor and all other expenses resulting from replacement of the defective parts and from installation of parts furnished under this warranty and regular maintenance items such as filters or bulbs shall be borne by the owner. This warranty does not cover general system misuse, aerator components which have been damaged by flooding or any components that have been disassembled by unauthorized persons, improperly installed or damaged due to altered or improper wiring or overload protection. This warranty applies only to the treatment plant and does not include any of the structure wiring, plumbing, drainage, septic tank or disposal system. Bio-Microbics, Inc. is reserves the right to revise, change or modify the construction and/or design of the MyFAST system, or any component part or parts thereof, without incurring any obligation to make such changes or modifications in present equipment. Bio-Microbics, Inc. is not responsible for consequential or incidental damages of any nature resulting from such things as, but not limited to, defect in design, material, or workmanship, or delays in delivery, replacements or repairs.
THIS WARRANTY IS IN LIEU OF ALL OTHER WARRANTIES EXPRESS OR IMPLIED. BIO-MICROBICS SPECIFICALLY DISCLAIMS ANY IMPLIED WARRANTY OF MERCHANTABILITY OR FITNESS FOR A PARTICULAR PURPOSE. NO REPRESENTATIVE OR PERSON IS AUTHORIZED TO GIVE ANY OTHER WARRANTY OR TO ASSUME FOR BIO-MICROBICS, INC., ANY OTHER LIABILITY IN CONNECTION WITH THE SALE OF ITS PRODUCTS.
Contact your local distributor for parts and service.

DO NOT SCALE

UNLESS NOTED DIMENSIONS ARE IN INCHES [CENTIMETERS] TOLERANCES ± 0.02 IN/IN [± 0.05 CM/CM]

BIO MICROBICS
BETTER WATER BETTER WORLD®

MyFAST 4.0

WEIGHT	lb	SIZE	DRAWING NUMBER	
NAME	DATE	A	BASIC Specifications	SHEET 6 OF 8
DRAWN	3/27/2009			
CHECKED PF	9/19/2013	REVISED 9/19/2013	REV.	

AERATION MANAGEMENT SYSTEM (AMS) OPTION

1. GENERAL INSTALLATION INSTRUCTIONS
All work must be done in accordance with local codes and regulations. Installation of the Aeration Management System (AMS) Option shall be done in accordance with the written instructions provided by the manufacturer. Manuals which include descriptions of system installation, operation, and maintenance procedures shall be furnished. For further details refer to the Installation Manual.

3. LIXOR® 4.0XD
The LIXOR® 4.0XD system shall provide mixing to reduce primary sludge settling prior to the Treatment Zone. The contractor shall furnish and install (1) LIXOR® 4.0XD aeration system in the AMS Zone of the MyFAST®. The system shall be complete with all needed equipment as shown on the drawings and specified herein. The principal items of equipment shall include LIXOR® aerator, blower assembly, blower controls and alarms. All other items will be provided by others.
The LIXOR® 4.0XD system shall be evenly distributed within the AMS Zone as shown on the plans so as to maximize mixing and reduce settling. The AMS Zone Tank(s) must provide adequate access for service activities and comply with all state and local codes.

- LIXOR® AERATOR
  The LIXOR® aerator shall be manufactured of rigid PVC and ABS. The aerator shall be fixed in position anchored by non corrosive fasteners supplied by others and contain no moving or wearing parts and shall not corrode.

- BLOWER
  The LIXOR® 4.0XD system shall come equipped with a regenerative type blower capable of delivering 60-140 CFM (102-238 m3/hr). The blower assembly shall include an inlet filter with metal filter element. The blower shall be secured on the walkway or perimeter, of tank on a contractor supplied base. The blower must not set in standing water and its elevation must be higher than the normal flood level and higher than the tanks operating level. A two-piece, blower housing shall be provided. The discharge air line from the blower to the LIXOR® unit shall be provided and installed by others.

- ELECTRICAL
  The electrical source should be within 150 feet [45.7 meters] of the blower. Consult local codes for longer wiring distances. All wiring must conform to all applicable codes (IEC, NEC, etc.). Wiring distances must prevent significant voltage loss. Input power on 60Hz electrical system is 3Ø 208-230/460 VAC, and 19.7/11.4 FLA. Input power on 50Hz electrical system is 3Ø, 230/400 VAC, and 19.7/11.4 FLA. All conduit and wiring shall be supplied by others.

- CONTROLS
  The standard control panel provides power to the blower with an alarm system equipped with a visual and audible alarm capable of signaling blower circuit failure. A manual silence button in included.

- VENTILATION
  If the AMS Zone is covered vent to desired location and cover opening with a vent grate with at least 13 sq in. (80 sq. cm) open surface area. Secure with Stainless Steel screws. Vent piping must not allow condensate build up or create back pressure. Vent must be above finished grade or higher.

4. WARRANTY
Bio-Microbics, Inc. warrants all Bio-Microbics supplied AMS components against defects in materials and workmanship for a period of one year after installation or eighteen months from date of shipment which ever occurs first, subject to the following terms and conditions:
During the warranty period, if any part is defective or fails to perform as specified when operating at design conditions, and if the equipment has been installed and is being operated and maintained in accordance with the written instructions provided by Bio-Microbics, Inc. Bio-Microbics, Inc. will repair or replace at its discretion such defective parts free of charge. Defective parts must be returned by owner to Bio-Microbics, Inc.'s factory postage paid, if so requested. The cost of labor and all other expenses resulting from replacement of the defective parts and from installation of parts furnished under this warranty and regular maintenance items such as filters or bulbs shall be borne by the owner. This warranty does not cover: general system misuse, aerator components which have been damaged by flooding or any components that have been disassembled by unauthorized persons, improperly installed or damaged due to altered or improper wiring or overload protection. This warranty applies only to the AMS components and does not include any of the structure wiring, plumbing, drainage, septic tank or disposal system. Bio-Microbics, Inc. reserves the right to revise, change or modify the construction and/or design of the components, without incurring any obligation to make such
changes or modifications in present equipment. Bio-Microbics, Inc. is not responsible for consequential or incidental damages of any nature resulting from such things as, but not limited to, defect in design, material, or workmanship, or delays in delivery, replacements or repairs.
THIS WARRANTY IS IN LIEU OF ALL OTHER WARRANTIES EXPRESS OR IMPLIED. BIO-MICROBICS SPECIFICALLY DISCLAIMS ANY IMPLIED WARRANTY OF MERCHANTABILITY OR FITNESS FOR A PARTICULAR PURPOSE.
NO REPRESENTATIVE OR PERSON IS AUTHORIZED TO GIVE ANY OTHER WARRANTY OR TO ASSUME FOR BIO-MICROBICS, INC., ANY OTHER LIABILITY IN CONNECTION WITH THE SALE OF ITS PRODUCTS.
Contact your local distributor for parts and service.

DO NOT SCALE
UNLESS NOTED DIMENSIONS ARE IN INCHES [CENTIMETERS] TOLERANCES ± 0.02 IN/IN [± 0.05 CM/CM]

BIO MICROBICS
BETTER WATER. BETTER WORLD.
MyFAST 4.0

WEIGHT	lb.	SIZE	DRAWING NUMBER	
NAME	DATE	A	AMS Specifications	SHEET 7 OF 8
DRAWN	3/27/2009			
CHECKED PT	9/19/2013	REVISED 9/17/2013	REV.	

BIOSOLIDS MANAGEMENT SYSTEM (BMS) OPTION

1. GENERAL INSTALLATION INSTRUCTIONS
All work must be done in accordance with local codes and regulations. Installation of the BMS Option shall be done in accordance with the written instructions provided by the manufacturer. Manuals which include descriptions of system installation, operation, and maintenance procedures shall be furnished. For further details refer to the Installation Manual.

2. DECANT PUMP AND JIB CRANE
A decant pump is provided for pumping the supernatant from the BMS Zone to the MyFAST® Treatment Zone. The standard decant pump will be controlled by a manual start/stop controller. The jib crane is provided for adjusting the height of the decant pump. The jib crane is designed to handle a lifting capacity of 500 Lbs. and a lifting range of 160 inches [305cm]. All wiring must conform to all applicable codes (IEC, NEC, etc.). Wiring distances must prevent significant voltage loss.

PUMP DETAILS

- The standard 60 Hz decant pump shall be capable of pumping 100 to 125 gpm [380 to 470 Lpm]at 10 feet [3m] of total dynamic head. Input power on 60Hz electrical system is 3Ø, 208-230/460 VAC, and maximum 3.8/1.7 FLA. All conduit and wiring shall be supplied by others.
- The standard 50 Hz decant pump shall be capable of pumping 300 to 400 Lpm at 3m of total dynamic head. Input power on 50Hz electrical system is 3Ø, 380 VAC, and 1.5 FLA. All conduit and wiring shall be supplied by others.

3. LIXOR 2.0®
The LIXOR® 2.0 system shall provide oxygen and mixing to reduce biosolids quantity prior to final disposal. The contractor shall furnish and install (1) LIXOR® 2.0 aeration system in the BMS Zone of the MyFAST®. The system shall be complete with all needed equipment as shown on the drawings and specified herein. The principal items of equipment shall include LIXOR® aerator, blower assembly, blower controls and alarms. All other items will be provided by others.
The LIXOR® 2.0 system shall be evenly distributed within the BMS Zone as shown on the plans and spaced for maximum mixing and aeration. The BMS Zone Tank(s) must provide adequate access for wasting of solids, and must conform to local, state, and all other applicable codes.

- LIXOR® AERATOR
  The LIXOR® aerator shall be manufactured of rigid PVC and ABS. The aerator shall be fixed in position anchored by non corrosive fasteners supplied by others and contain no moving or wearing parts and shall not corrode.
- BLOWER
  The LIXOR® 2.0 system shall come equipped with a regenerative type blower capable of delivering 20-50 CFM [34-85 m3/hr]. The blower assembly shall include an inlet filter with metal filter element. The blower shall be secured on the walkway or perimeter of tank on a contractor supplied base. The blower must not set in standing water and its elevation must be higher than the normal flood level and the tank's operating level. A two-piece, blower housing shall be provided. The discharge air line from the blower to the LIXOR® unit shall be provided and installed by others.
- ELECTRICAL
  The electrical source should be within 150 feet [45.7 meters] of the blower consult local codes for longer wiring distances. All wiring must conform to all applicable codes (IEC, NEC, etc.). Wiring distances must prevent significant voltage loss. Input power on 60Hz electrical system is 3Ø, 208-230/460 VAC, and 6.3/2.9 FLA. Input power on 50Hz electrical system is 3Ø, 230/400 VAC, and 6.1/3.5 FLA. All conduit and wiring shall be supplied by others.
- CONTROLS
  The standard control panel provides power to the blower with an alarm system consisting of a visual and audible alarm capable of signaling blower circuit failure. A manual silence button in included
- VENTILATION
  If the BMS zone is covered vent to desired location and cover opening with a vent grate with at least 7 sq in. (45 sq. cm) open surface area. Secure with Stainless Steel screws. Vent piping must not allow condensate build up or create back pressure. Vent must be above finished grade or higher.

4. WARRANTY
Bio-Microbics, Inc. warrants all Bio-Microbics supplied BMS components against defects in materials and workmanship for a period of one year after installation or eighteen months from date of shipment which ever occurs first, subject to the following terms and conditions:
During the warranty period, if any part is defective or fails to perform as specified when operating at design conditions, and if the equipment has been installed and is being operated and maintained in accordance with the written instructions provided by Bio-Microbics, Inc., Bio-Microbics, Inc. will repair or replace at its discretion such defective parts free of charge. Defective parts must be returned by owner to Bio-Microbics, Inc.'s factory postage paid, if so requested. The cost of labor and all other expenses resulting from replacement of the defective parts and from installation of parts furnished under this warranty and regular maintenance items such as filters or bulbs shall be borne by the owner. This warranty does not cover: general system misuse, aerator components which have been damaged by flooding or any components that have been disassembled by unauthorized persons, improperly installed or damaged due to altered or improper wiring or overload protection. This warranty applies only to the BMS components and does not include any of the structure wiring, plumbing, drainage, septic tank or disposal system.
Bio-Microbics, Inc. reserves the right to revise, change or modify the construction and/or design of the components, without incurring any obligation to make such changes or modifications in present equipment. Bio-Microbics, Inc. is not responsible for consequential or incidental damages of any nature resulting from such things as, but not limited to, defect in design, material, or workmanship, or delays in delivery, replacements or repairs.
THIS WARRANTY IS IN LIEU OF ALL OTHER WARRANTIES EXPRESS OR IMPLIED. BIO-MICROBICS SPECIFICALLY DISCLAIMS ANY IMPLIED WARRANTY OF MERCHANTABILITY OR FITNESS FOR A PARTICULAR PURPOSE. NO REPRESENTATIVE OR PERSON IS AUTHORIZED TO GIVE ANY OTHER WARRANTY OR TO ASSUME FOR BIO-MICROBICS, INC., ANY OTHER LIABILITY IN CONNECTION WITH THE SALE OF ITS PRODUCTS. Contact your local distributor for parts and service.

DO NOT SCALE
UNLESS NOTED DIMENSIONS ARE IN INCHES [CENTIMETERS] TOLERANCES ± 0.02 IN/IN [± 0.05 CM/CM]

BIO MICROBICS
BETTER WATER. BETTER WORLD.
MyFAST 4.0

WEIGHT	lb	SIZE	DRAWING NUMBER	
NAME	DATE	A	BMS Specifications	SHEET 8 OF 8
DRAWN	3/27/2009			
CHECKED PF	9/19/2013	REVISED 9/19/2013	REV	

APPENDIX F – ORENCO PROPOSAL

Specialists in Pumping Equipment

Phone: (603) 875-7000
(800) 582-7231
Fax: (603) 875-6999

WATER INDUSTRIES, INC.

PO Box 218
Alton, New Hampshire 03809

Preliminary Evaluation of an Orenco® AdvanTex® Treatment Facility

Project Name
Bristol, Town of

Prepared for
Kevin Camara, P.E.
Green Mountain Engineering, Inc.

Prepared by
Garry-Lee Espinosa
Orenco Systems, Inc.

Date
January 8, 2018

Orenco® SYSTEMS

Advantex® Treatment System Project Proposal

Project Name: Bristol, City of

Project Location: Bristol, VT

Application: Municipal

DESIGN PARAMETERS

The facility addressed in this proposal includes residential and light commercial properties. Projected wastewater flow rates and organic loading were provided and based upon historic and projected usage for the existing facility.

Wastewater Flow Rates

Wastewater design flows for the service area were provided by Green Mountain Engineering, Inc. and are outlined in the table below.

Table 1. Hydraulic Design Parameters —Design Average Day Flow (DADF)

Hydraulic Design Parameters for Proposed Facilities		
Service Type	**Flow Assumptions**	**Daily Flow (gpd)**
Municipal		20000

Wastewater Strengths

Wastewater samples for the service area were provided by Green Mountain Engineering and are outlined in the tables below.

Table 2. Constituent Loading Assumptions

Parameter	DADF, gpd	Concentration (mg/L)	Primary Treated Load (lbs/day)
Biochemical Oxygen Demand (BOD5), mg/L:	20,000	540	90.13
Total Suspended Solids (TSS), mg/L:	20,000	120	20.03

Permit Limits and Loading Rates

The following table provides the discharge limitations as provided by Green Mountain Engineering, Inc.. The scope of this proposal is pertinent only to BOD_5, and TSS.

Table 3. Permit Limits

Permit Constituent or Parameter	Average
Biochemical Oxygen Demand (BOD5), mg/L:	30
Total Suspended Solids (TSS), mg/L:	30

Table 4. Standard AdvanTex Loading Rates

Permit Constituent or Parameter	Design AVERAGE Day	Design MAXIMUM Day
Hydraulic	25 gpd/sq.ft•d	50 gpd/sq.ft•d
BOD_5	0.04 lbs/sq.ft•d	0.08 lbs/sq.ft•d

TECHNOLOGY DESCRIPTION & SIZING

Packed bed filters (PBFs) – incorporating treatment media such as sand, gravel, and textile – have been used successfully for decades to treat onsite wastewater flows. These filters reliably produce high quality effluent that is superior to that discharged by the majority of our nation's municipal treatment facilities. The most effective of these filters is AdvanTex Treatment System. This proposal provides an estimate of system sizing and costs based upon the information provided. This proposal does not constitute a design.

Table 6. Standard AdvanTex System Sizing

Permit Constituent or Parameter	Load Value (DADF)	Loading Rate	AdvanTex Unit Size
Hydraulic	20000 gpd	25 gpd/sq.ft•d	800 sq.ft.
Biochemical Oxygen Demand (BOD5), mg/L:	90.13 lbs	0.04 lbs/sq.ft•d	2253 sq. ft.
Total Suspended Solids (TSS), mg/L:	20.03 lbs	0.04 lbs/sq.ft•d	501 sq. ft.

EQUIPMENT SELECTION

Table 7. Orenco AX-Max Treatment Equipment

Treatment Unit(s):	(8) AX-MAX300-42
Pump Basin Unit:	T-MAX21
Pumping Setup:	(8) PF14520
Treatment Volume:	69,120 U.S. Gallons
Pump Basin Volume:	7,500 U.S. Gallons

Table 8. Orenco AX-Max Treatment Equipment and Estimated Installation Costs

Project Estimated Costs		**Total**
Treatment Subtotal		$959,912
Ancillary Equipment (control panel) Subtotal		$29,500
Materials and Equipment Subtotal		**$989,412**
Shipping, Commissioning, and Operator Training		$115,663
Construction Estimate		
Total Project Estimate		**$1,105,075**

See Appendix for complete material breakdown.

All estimates are for budgetary purposes only. See Appendix for breakdown of estimated costs. Actual quotes will be produced once the design and project plans are completed and provided by the designer. All estimates include Orenco provided materials and are F.O.B. Sutherlin or Winchester, Oregon. Freight costs can be determined after plans are finalized and are the responsibility of the purchaser, but will typically range from 5-12% of materials.

Cost estimates do not include material and labor costs for site work, utilities, state or local taxes, permitting, inspections, administration, engineering, etc.

SCHEDULING / MANUFACTURING

Lead Times

Lead times are currently estimated at 6-8 weeks upon time of purchase order.

Payment Terms & Conditions

100% at time of purchase order unless otherwise negotiated.

Warranty

Equipment will be warrantied against manufacturer's defects in accordance with Orenco Systems Inc. standard warranty of Five (5) years from time of purchase.

Proposal Period Validity

This proposal is valid for a period of sixty (60) days unless extended in writing by Orenco Systems Inc.

APPENDIX A: Estimated Cost Breakdown

WWTP Budgetary Estimate					
Qty	**Primary Treatment Materials**		**Per Unit**		**Total**
	Secondary Treatment Materials				
8	AX-MAX300-42		$86,950		$695,600
8	Anti-Floatation Flange for AX-MAX300-42		$16,225		$129,800
8	PF14520 Pumping system		$4,700		$37,600
	RNE Pump		$1,850		$1,850
4	Ventilation Assemblies with HEATER		$7,650		$30,600
	Float Assembly		$262		$262
8	Piping, fittings, glue		$200		$1,600
	T-MAX21		$53,400		$53,400
	Anti-Floatation Flange for T-MAX21		$9,200		$9,200
	Secondary Treatment Subtotal				**$959,912**
	Ancillary Materials				
	Telemetry Control Panel		$29,500		$29,500
	Ancillary Equipment Subtotal				**$29,500**
	Shipping, Commissioning, and Operator Training				
	Commissioning and Operator Training				
	Operation & Maintenance Manual				
	Shipping (as percent of materials)				$115,663
	Construction Estimate				
	Labor and Misc. Equipment (% of Materials)				

Only items shown are estimated. This budgetary estimate does not include materials and labor costs for controls building, site work, dispersal system, utilities, state or local taxes, permitting, inspections, administration, engineering, etc.	**Materials and Equipment Subtotal**	$989,412
	Construction Estimate	
	Shipping and Commissioning	$115,663
	Total Project Estimate	$1,105,075

APPENDIX B: Flow Path

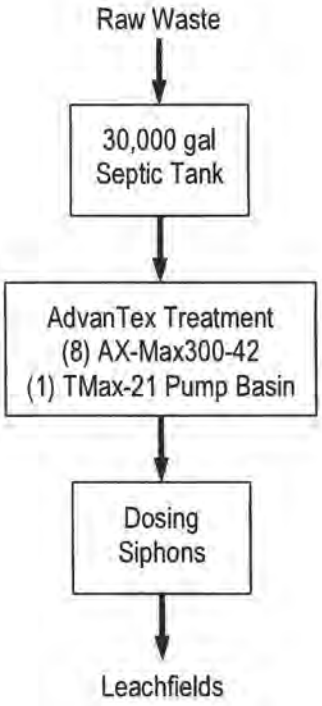

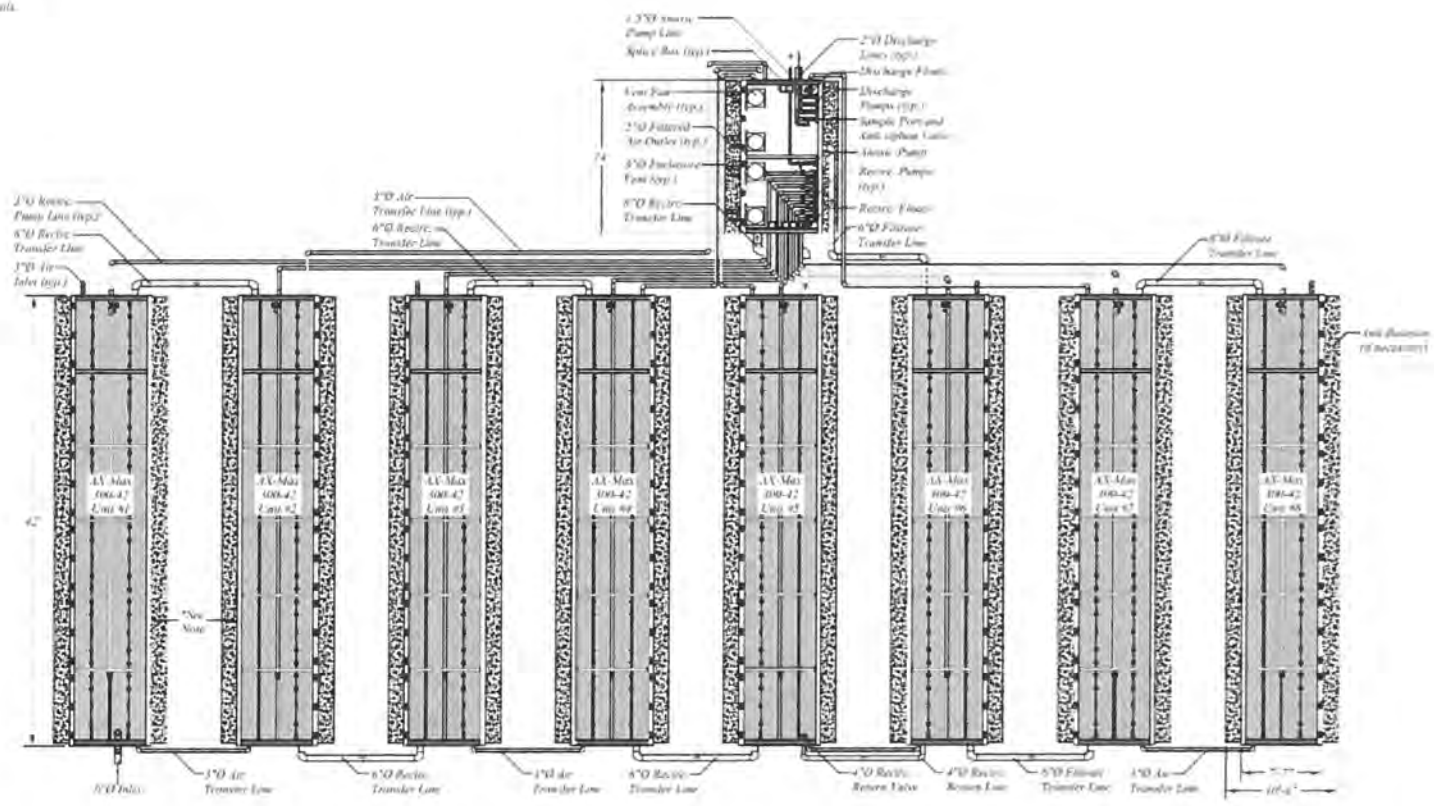

Customer Approval

Signature: _____ Date: _____

Customer Name: _____

By this signature, Customer indicates that they have reviewed the Proposed System Configuration Drawing and found that it meets all of the designer's functional requirements and/or specifications.

Orenco SYSTEMS

Disclaimer: The Proposed System Configuration Drawing is provided solely as a design aid and illustrates one possible configuration of a system that would comply with Orenco's design criteria for the requirements and/or specifications that have been communicated to Orenco (based on third-party standards testing protocols and performance reports, as available). Design decisions, including the actual layout and configuration of the system and its viability for the project, are at the sole discretion of the system's designer.

AdvanTex AX-Max2400 Pump Discharge	Drawn By: BAS	Scale: 1" = 10'-0"	
	Reviewed By: SH	Sheet: 1 OF 10	
Plan View	File Name: AX-MAX2400-1.DWG	Rev: 2.0	Date: 01/02/2017